*Preliminary Data Sheet*

# VSC7923

*SONET/SDH 2.5Gb/s Laser Diode Driver*

## Features

- Rise Times Less Than 100ps
- High Speed Operation (Up to 2.4Gb/s NRZ Data)
- Single-Ended or Differential Input Operation
- Single Power Supply
- Direct Access to Modulation and Bias FETs
- Data Density Monitors

## Applications

- SONET/SDH at 622Mb/s, 1.244Gb/s, 2.488Gb/s, 3.125Gb/s
- Full-Speed Fibre Channel (1.062Gb/s)

## General Description

The VSC7923 is a single 5V supply, 2.4 Gb/s laser diode driver with direct access to the laser modulation and bias FET's. Laser bias and modulation currents are set by external components allowing precision monitoring and setting of the current levels. Data inputs accept ECL levels. Data density outputs are provided to allow the user to adjust the laser bias in high unbalanced data applications.

## VSC7923 Block Diagram

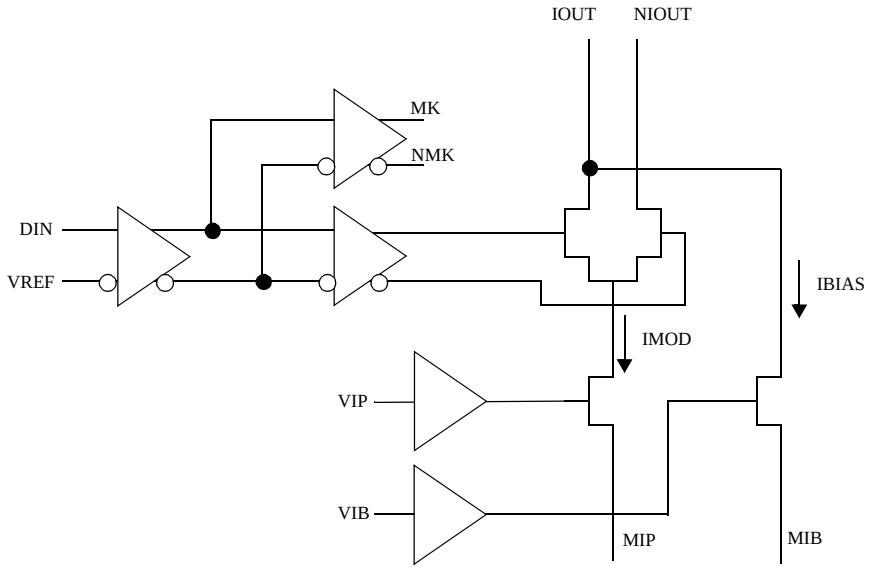




© *VITESSE SEMICONDUCTOR CORPORATION* • 741 Calle Plano • Camarillo, CA 93012
Tel: (800) VITESSE • FAX: (805) 987-5896 • Email: prodinfo@vitesse.com
Internet: www.vitesse.com

### Table 1: Signal Pin Reference

| *Signal* | *Type* | *Level* | *# Pins* | *Description* |
|---|---|---|---|---|
| DIN | In | ECL | 1 | Data Input |
| MK, NMK | Out | ECL | 2 | Data Density Differential Outputs |
| NIOUT | Out | | 1 | Laser Modulation Current Output (Complementary) |
| IOUT | Out | | 1 | Laser Modulation Current Output (To Laser Cathode)) |
| VSS | Pwr | Pwr | 5 | Negative Voltage Rail |
| GND | Pwr | Pwr | 9 | Positive Voltage Rail |
| VIP | In | DC | 1 | Modulation Gate Node |
| MIP | In | DC | 1 | Modulation Source Node |
| VIB | In | DC | 1 | Bias Gate Node |
| MIB | In | DC | 1 | Bias Source Node |
| VREF | In | DC | 1 | Data Input Reference |
| Total Pins | | | 24 | |

### Table 2: Absolute Maximum Ratings

| *Symbol* | *Rating* | *Limit* |
|---|---|---|
| $V_{SS}$ | Negative Power Supply Voltage | $V_{CC}$ to -6.0V |
| $T_J$ | Maximum Junction Temperature | -55°C to + 125°C |
| $T_{STG}$ | Storage Temperature | -65°C to +150°C |

### Table 3: Recommended Operating Conditions

| *Symbol* | *Parameter* | *Min* | *Typ* | *Max* | *Units* | *Conditions* |
|---|---|---|---|---|---|---|
| GND | Positive Voltage Rail | — | 0 | — | V | |
| VSS | Negative Voltage Rail | -5.5 | -5.2 | -4.9 | V | |
| $T_{Cl}$ | Operational Temperature(1) | -40 | — | 85(2) | °C | Power dissipation = 1.25W |
| $T_J$ | Junction Temperature | — | — | 125 | °C | |

*NOTES: (1) Lower limit of specification is ambient temperature and upper limit is case temperature. (2) See section "Calculation of the Maximum Case Temperature" for detailed maximum temperature calculations.*

### Table 4: ECL Input and Outputs

| *Symbol* | *Parameter* | *Min* | *Typ* | *Max* | *Units* | *Conditions* |
|---|---|---|---|---|---|---|
| $V_{IN}$ | Input Voltage Swing | 300 | — | 800 | mV | Peak-to-peak, $V_{REF}$ = -2.0V |
| $V_{OH}$ | ECL Output High Voltage | -1200 | — | — | mV | 50Ω to -2.0V |
| $V_{OL}$ | ECL Output Low Voltage | — | — | -1600 | mV | 50Ω to -2.0V |


© *VITESSE SEMICONDUCTOR CORPORATION* • 741 Calle Plano • Camarillo, CA 93012
Tel: (800) VITESSE • FAX: (805) 987-5896 • Email: prodinfo@vitesse.com
Internet: www.vitesse.com

**Table 5: Power Dissipation**

| *Symbol* | *Parameter* | *Min* | *Typ* | *Max* | *Units* | *Conditions* |
|---|---|---|---|---|---|---|
| $I_{VSS}$ | Power Supply Current (VSS) | — | — | 220 | mA | $V_{SS}$ = -5.5V, $I_{MOD}$ = $I_{BIAS}$ = 0mA |
| $P_D$ | Total Power Dissipation | — | — | 1210 | mW | $V_{SS}$ = -5.5V, $I_{MOD}$ = $I_{BIAS}$ = 0mA, $R_{LOAD}$ = 25Ω to GND |
| $P_{DMAX}$ | Maximum Power Dissipation | — | — | 1815 | mW | $V_{SS}$ = -5.5V, $I_{MOD}$ = 60mA, $I_{BIAS}$ = 50mA, $I_{OUT}$ = 0V |

**Table 6: Laser Driver DC Electrical Specifications**

| *Symbol* | *Parameter* | *Min* | *Typ* | *Max* | *Units* | *Conditions* |
|---|---|---|---|---|---|---|
| $I_{BIAS}$ | Programmable Laser Bias Current | 2 | — | 50 | mA | — |
| $I_{MOD}$ | Programmable Modulation Current | 2 | — | 60 | mA | — |
| $V_{IB}$ | Laser Bias Control Voltage | — | — | $V_{SS}$ + 2.1 | V | $I_{BIAS}$ = 50mA |
| $V_{IP}$ | Laser Modulation Control Voltage | — | — | $V_{SS}$ + 2.1 | V | $I_{MOD}$= 60mA |
| $V_{OCM}$ | Output Voltage Compliance | GND - 2.2V | — | — | V | $V_{SS}$ = -5.2V |

**Table 7: Laser Driver AC Electrical Specifications**

| *Symbol* | *Parameter* | *Min* | *Typ* | *Max* | *Units* | *Conditions* |
|---|---|---|---|---|---|---|
| $t_R$, $t_F$ | Output Rise and Fall Times | — | — | 100 | ps | 25Ω load, 20%-80%, 15mA < $I_{MOD}$ < 60mA, $I_{BIAS}$ = 20mA |

**Table 8: Package Thermal Specifications**

| *Symbol* | *Parameter* | *Min* | *Typ* | *Max* | *Units* | *Conditions* |
|---|---|---|---|---|---|---|
| $\theta_{JCC}$ | Thermal Resistance from Junction-to-Case | — | 25 | — | °C/W | Ceramic Package |
| $\theta_{JCMG}$ | Thermal Resistance from Junction-to-Case | — | 32 | — | °C/W | Metal Glass Package |


© ***VITESSE*** *SEMICONDUCTOR CORPORATION* • 741 Calle Plano • Camarillo, CA 93012
Tel: (800) VITESSE • FAX: (805) 987-5896 • Email: prodinfo@vitesse.com
Internet: www.vitesse.com

## Calculation of the Maximum Case Temperature

The VSC7923 is designed to operate with a maximum junction temperature of 125°C. The rise from the case to junction is determined by the power dissipation of the device. The power dissipation is determined by the $V_{SS}$ current plus the operating $I_{MOD}$ and $I_{BIAS}$ currents.

The power of the chip is determined by the following formula:

$$P_D=(-VSS * I_{SS}) + ((V_{IOUT} – V_{SS}) * I_{MOD}) + ((V_{IBIAS} – V_{SS}) * I_{BIAS})$$

For example with:

$V_{SS}$ = -5.2V
$I_{MOD}$ = 40mA
$I_{BIAS}$ = 20mA
$V_{IBIAS}$ = -2.0V
$V_{IOUT}$ = -2.0V

$P_D$ = 5.2 * 220mA) + ((5.2 - 2.0) * 40mA) + ((5.2-- 2.0) * 20mA)

PD = 1144mW + 128mW + 64mW = 1.336W

The thermal rise from junction to case is $\theta_{JC} * P_D$. For the metal glass package, $\theta_{JC}$ = 32 °C/W. Thus the thermal rise is:

32°C/W * 1.336W = 42.7°C

The maximum case temperature is:

125°C – 42.7°C = 82.3°C

The absolute maximum power dissipation of the device is at:

$V_{SS}$ = -5.5V
$I_{MOD}$ = 60mA
$I_{BIAS}$ = 50mA
$V_{IBIAS}$ = 0V
$V_{IOUT}$ = 0V

$P_D$ = (5.5 * 220mA) + (5.5 * 60mA) + (5.5mA * 50mA)

$P_D$ = 1.815W

This will net a maximum junction to case thermal rise of: 1.815W * 32°C/W = 58°C

This situation will allow maximum case temperature of: 125°C – 58°C = 67°C


© ***VITESSE*** *SEMICONDUCTOR CORPORATION* • 741 Calle Plano • Camarillo, CA 93012
Tel: (800) VITESSE • FAX: (805) 987-5896 • Email: prodinfo@vitesse.com
Internet: www.vitesse.com

## *Input Termination Schemes*

**Figure 1: Input Structure**

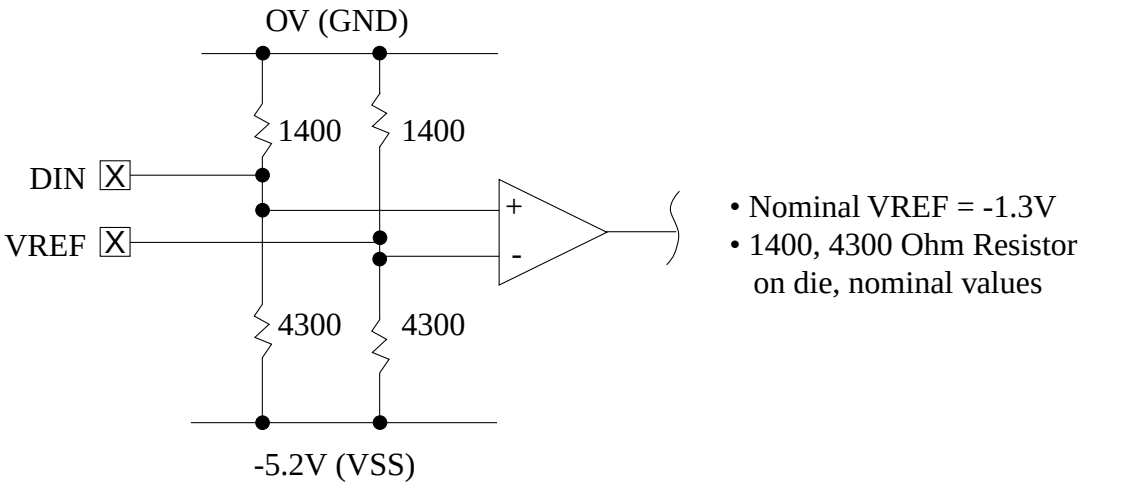


**Figure 2: Single Ended AC Coupled**

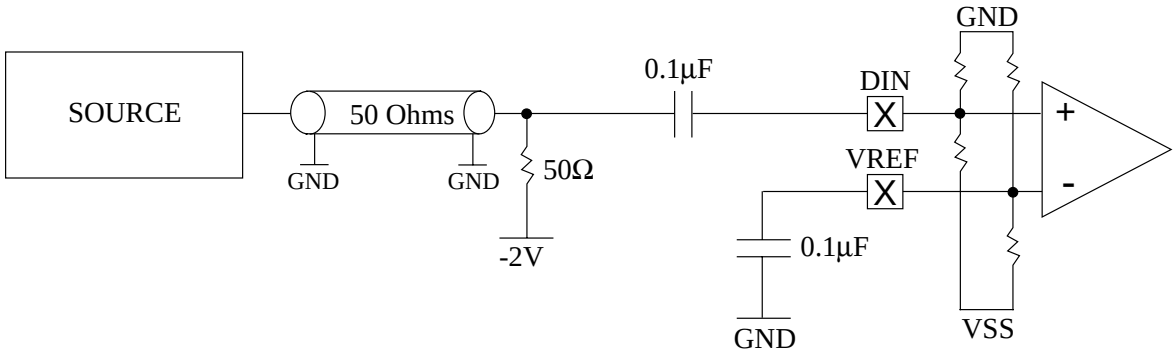


**Figure 3: Differential AC Coupled**

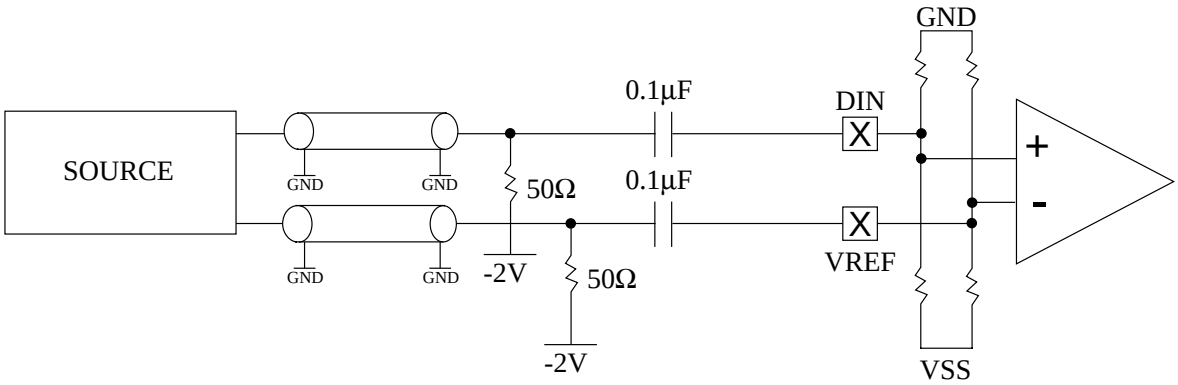




© ***VITESSE*** *SEMICONDUCTOR CORPORATION* • 741 Calle Plano • Camarillo, CA 93012
Tel: (800) VITESSE • FAX: (805) 987-5896 • Email: prodinfo@vitesse.com
Internet: www.vitesse.com

**Figure 4: Differential DC Coupled**

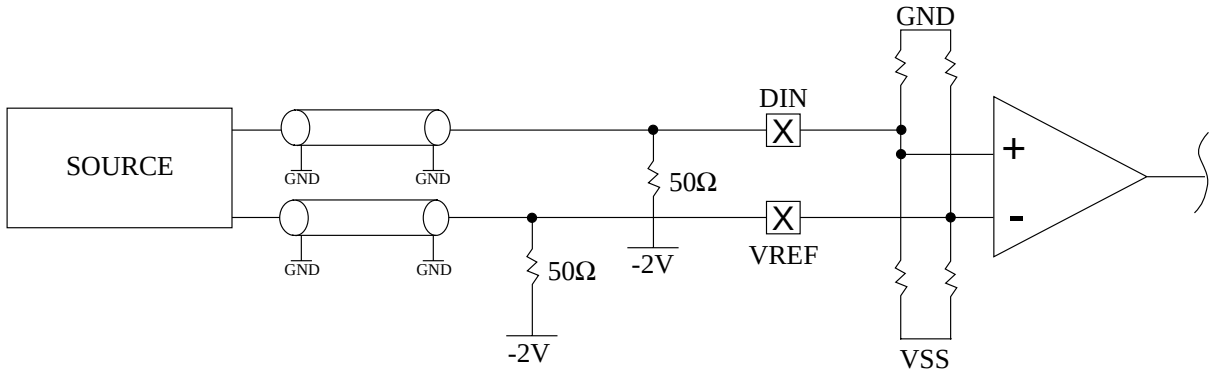


**Figure 5: Single Ended AC Coupled with Offset Adjust**

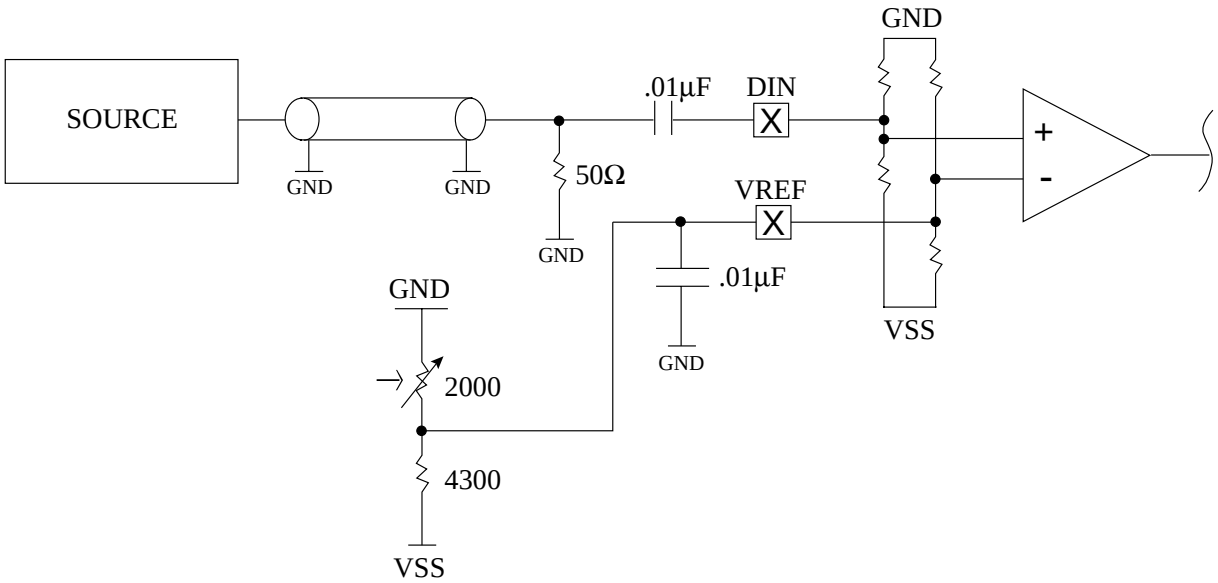




© ***VITESSE*** *SEMICONDUCTOR CORPORATION* • 741 Calle Plano • Camarillo, CA 93012
Tel: (800) VITESSE • FAX: (805) 987-5896 • Email: prodinfo@vitesse.com
Internet: www.vitesse.com

**Figure 6: Control Signals VIP and VIB**

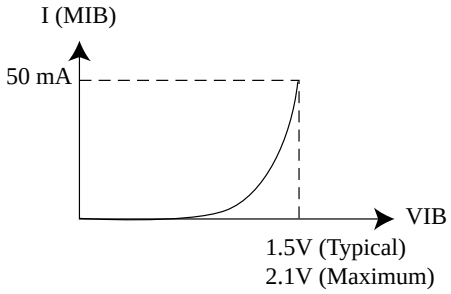


Typical Bias Current v.s. Bias Voltage

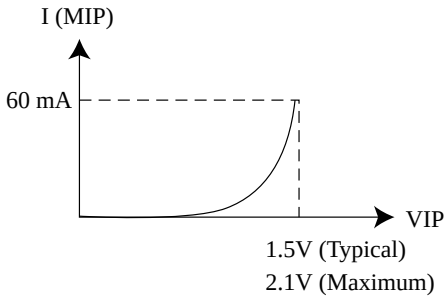


Typical Modulation Current v.s. Modulation Voltage

**Figure 7: Simplified Output Structure**

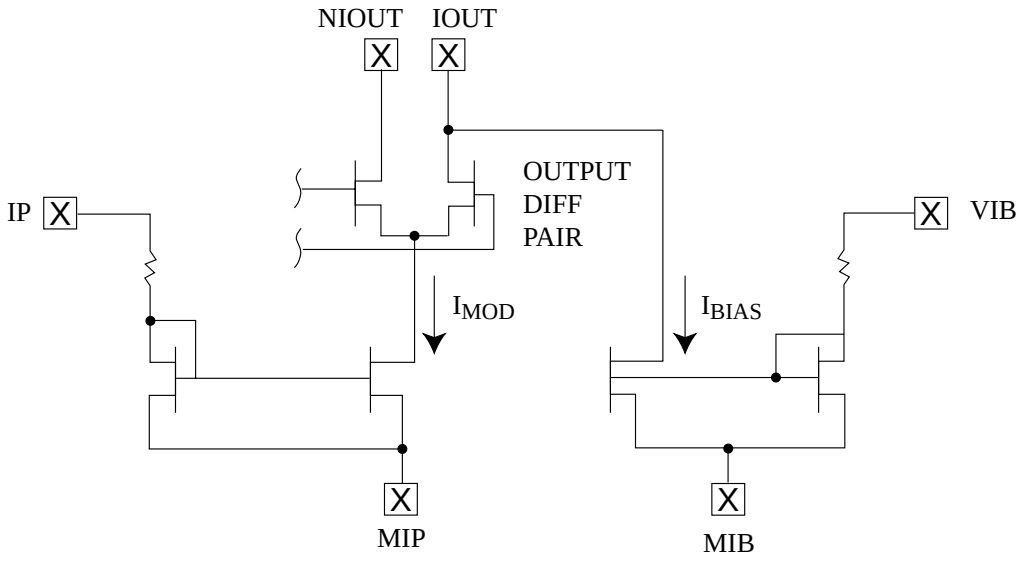




© ***VITESSE*** *SEMICONDUCTOR CORPORATION* • 741 Calle Plano • Camarillo, CA 93012
Tel: (800) VITESSE • FAX: (805) 987-5896 • Email: prodinfo@vitesse.com
Internet: www.vitesse.com

**Figure 8: Pad Assignments for VSC7923 Die**

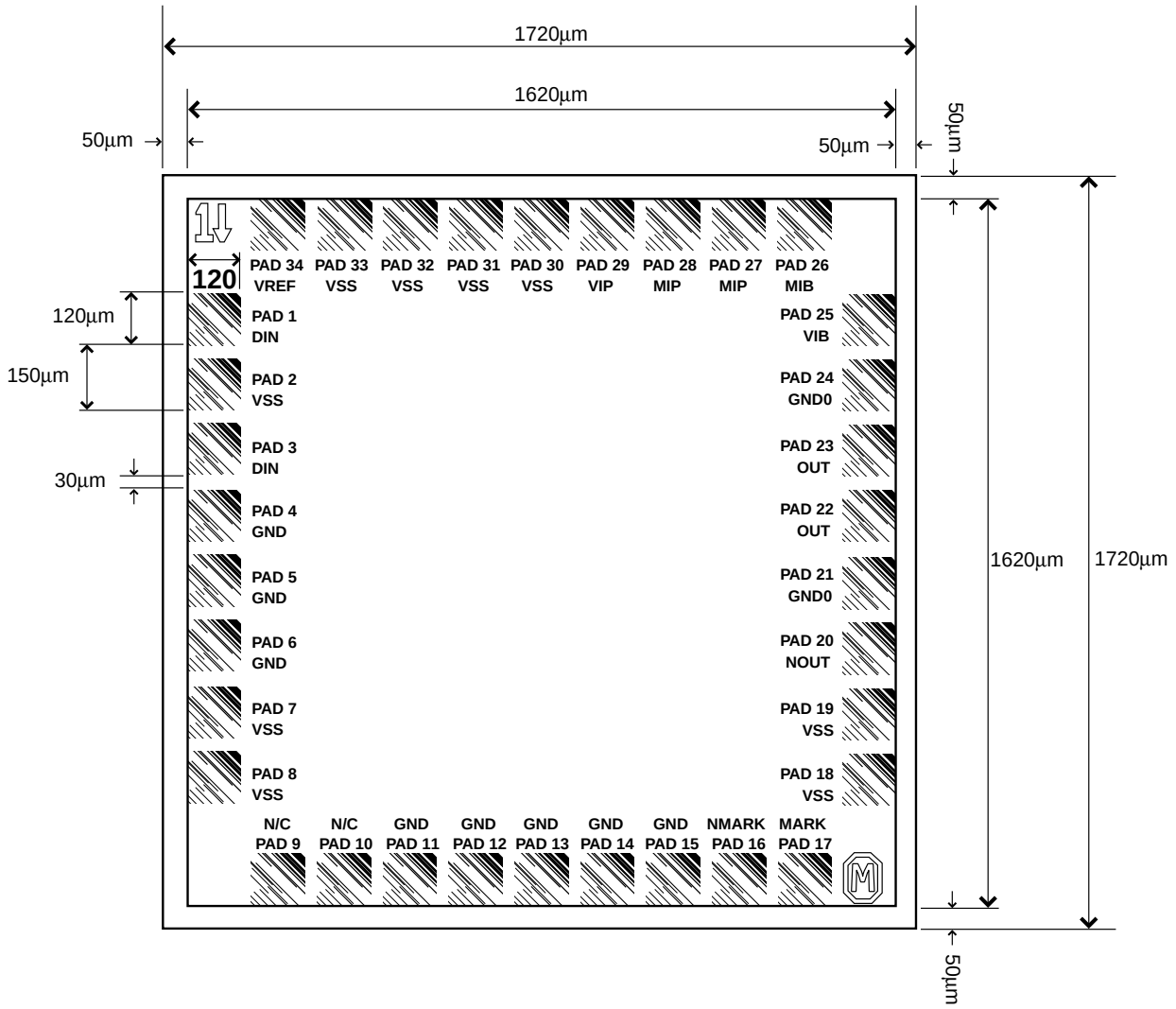


NOTES:
1) Die size = 1620µm x 1620µm
2) Actual die size = 1720µm x 1720µm (after die are cut up)
3) Pad size = 120µm x 120µm
4) Pad pitch = 150µm
5) Space betwen pads = 30µm


© ***VITESSE*** *SEMICONDUCTOR CORPORATION* • 741 Calle Plano • Camarillo, CA 93012
Tel: (800) VITESSE • FAX: (805) 987-5896 • Email: prodinfo@vitesse.com
Internet: www.vitesse.com

## *Pin Diagram for 24 Pin Metal-Glass Package*

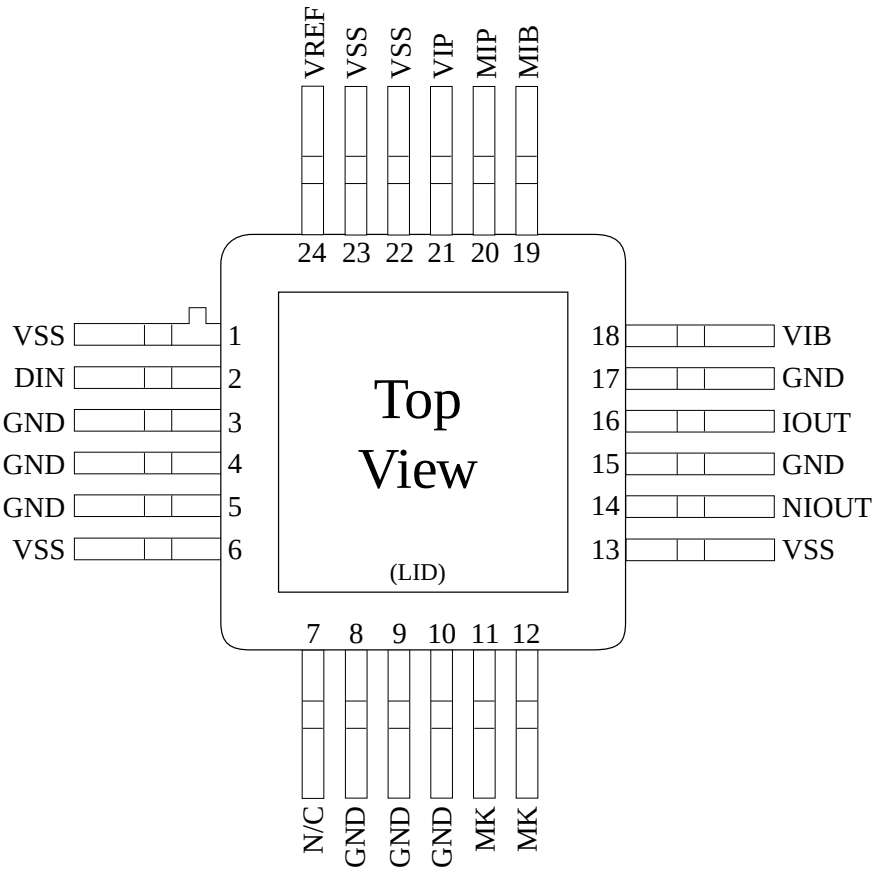


***Note:*** ***Package bottom plate is connected to GND within the package. Package lid is electrically unconnected.***



© ***VITESSE*** *SEMICONDUCTOR CORPORATION* • 741 Calle Plano • Camarillo, CA 93012
Tel: (800) VITESSE • FAX: (805) 987-5896 • Email: prodinfo@vitesse.com
Internet: www.vitesse.com

## *Package Information - 24 Pin Metal-Glass Package*

***Top View***

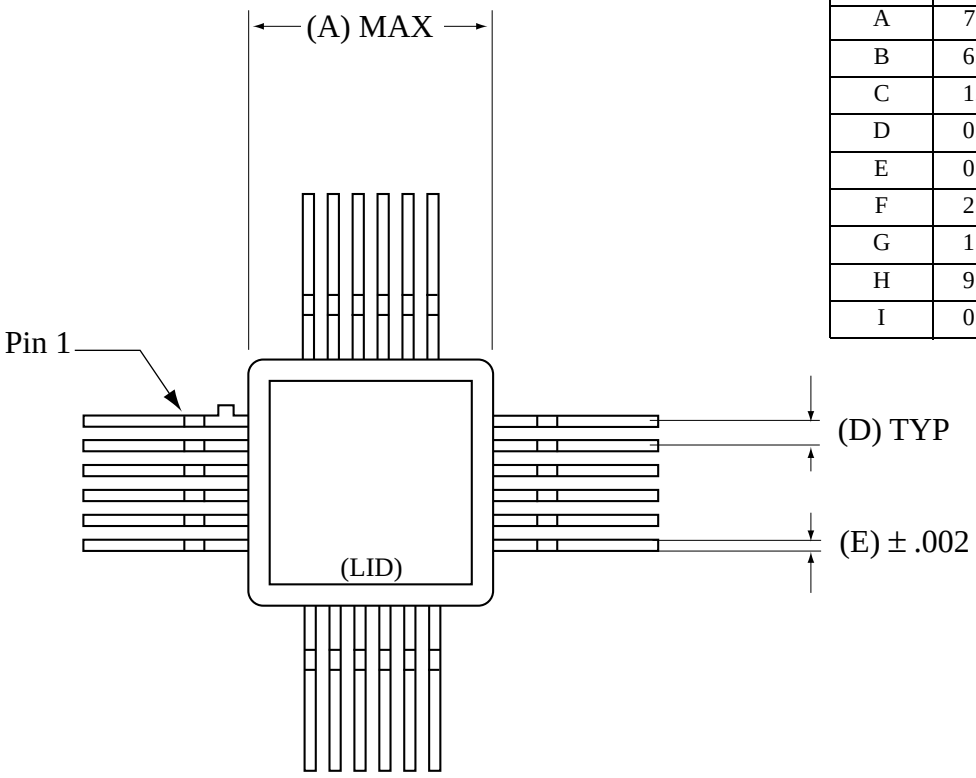


| *Key* | *mm* | *In* |
|---|---|---|
| A | 7.11 | 0.280 |
| B | 6.10 | 0.240 |
| C | 1.02 | 0.040 |
| D | 0.76 | 0.030 |
| E | 0.30 | 0.012 |
| F | 2.08 | 0.082 |
| G | 1.02 | 0.040 |
| H | 9.52 | 0.375 |
| I | 0.13 | 0.005 |

***Side View***

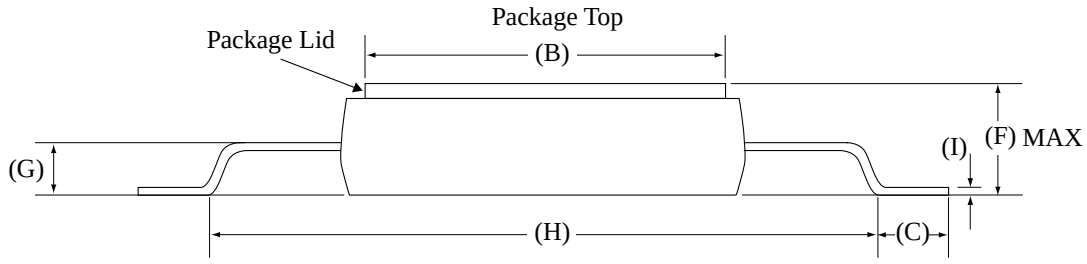


*NOTES: Drawing not to scale.*
*Package #: 101-291-8 Issue #:1*
*Lid #: 101-292-3 Issue #:1*



© ***VITESSE*** *SEMICONDUCTOR CORPORATION* • 741 Calle Plano • Camarillo, CA 93012
Tel: (800) VITESSE • FAX: (805) 987-5896 • Email: prodinfo@vitesse.com
Internet: www.vitesse.com

## Pin Diagram for 24 Pin Ceramic Package

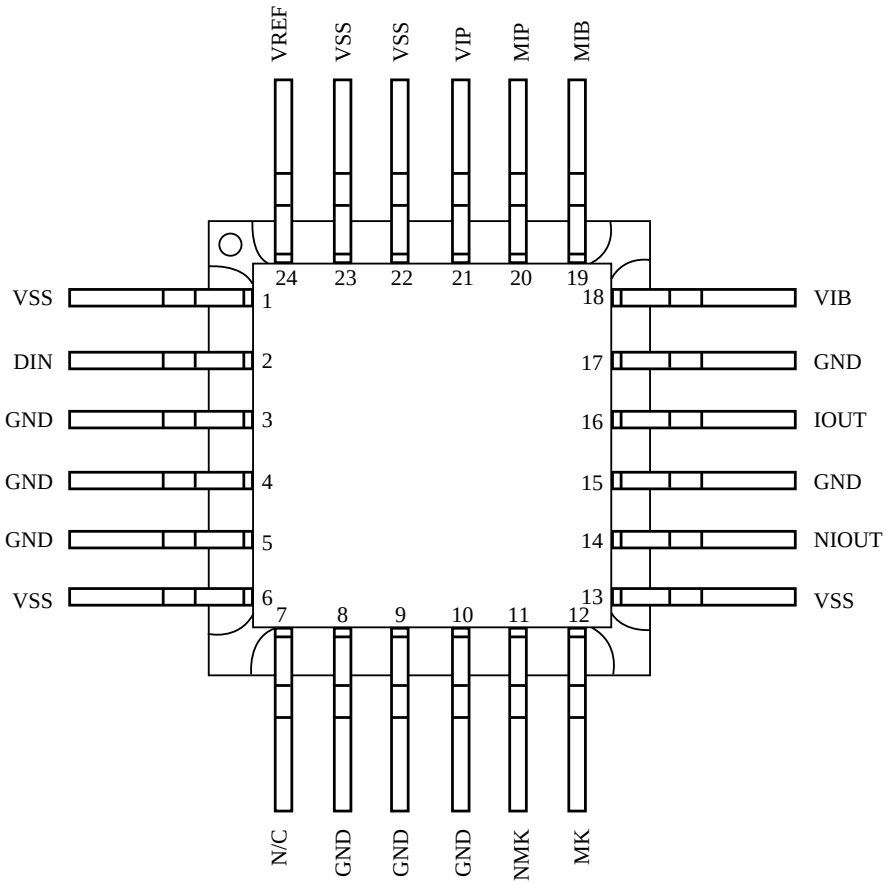


***Note:*** ***Package bottom plate is connected to GND within the package. Package lid is electrically unconnected.***



© ***VITESSE*** *SEMICONDUCTOR CORPORATION* • 741 Calle Plano • Camarillo, CA 93012
Tel: (800) VITESSE • FAX: (805) 987-5896 • Email: prodinfo@vitesse.com
Internet: www.vitesse.com

## Package Information - 24 Pin Ceramic Package

***Top View***

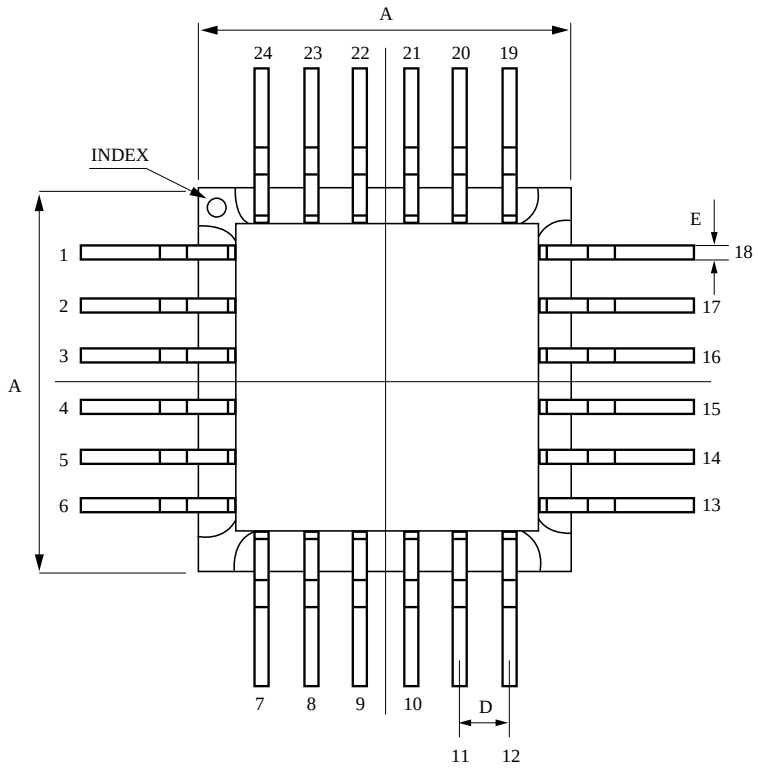


| *Key* | *mm* | *In* |
|---|---|---|
| A | 9.5 | 0.374 |
| B | 7.7 | 0.303 |
| C | 2.0 | 0.079 |
| D | 1.27 | 0.050 |
| E | 0.30 | 0.012 |
| F | 1.7 | 0.067 |
| G | 0.6 | 0.024 |
| H | 11.5 | 0.453 |
| I | 0.125 | 0.005 |
| J | 8.51 | 0.335 |

***Side View***

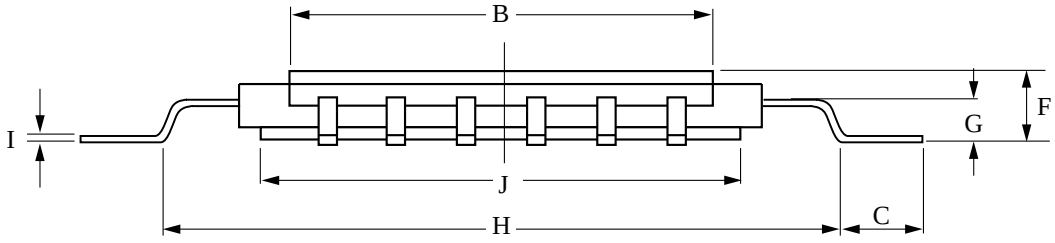


*NOTES: Drawing not to scale.*
*Package #: 101-312-0 Issue #:1*
*L id #: 101-303-1 Issue #:1*



© ***VITESSE*** *SEMICONDUCTOR CORPORATION* • 741 Calle Plano • Camarillo, CA 93012
Tel: (800) VITESSE • FAX: (805) 987-5896 • Email: prodinfo@vitesse.com
Internet: www.vitesse.com

## Ordering Information

The order number for this product is formed by a combination of the device number, and package style.

**VSC7923 XX**

**Device Type**
2.5Gb/s Laser Diode Driver

**Package Style (24 pin)**

CA: Metal Glass Package—Straight Leads
KF: Ceramic Package—Straight Leads
KFL: Ceramic Package—Formed Leads
X: Bare Die

**Notice**

Vitesse Semiconductor Corporation (“Vitesse”) provides this document for informational purposes only. This document contains pre-production information about Vitesse products in their concept, development and/or testing phase. All information in this document, including descriptions of features, functions, performance, technical specifications and availability, is subject to change without notice at any time. Nothing contained in this document shall be construed as extending any warranty or promise, express or implied, that any Vitesse product will be available as described or will be suitable for or will accomplish any particular task.

Vitesse products are not intended for use in life support appliances, devices or systems. Use of a Vitesse product in such applications without written consent is prohibited.



© ***VITESSE*** *SEMICONDUCTOR CORPORATION* • 741 Calle Plano • Camarillo, CA 93012
Tel: (800) VITESSE • FAX: (805) 987-5896 • Email: prodinfo@vitesse.com
Internet: www.vitesse.com

© ***VITESSE*** *SEMICONDUCTOR CORPORATION* • 741 Calle Plano • Camarillo, CA 93012
Tel: (800) VITESSE • FAX: (805) 987-5896 • Email: prodinfo@vitesse.com
Internet: www.vitesse.com