Precision Voltage Reference

FEATURES

- Very High Accuracy: +4.5 V Output, ±0.8 mV
- Extremely Low Drift: 0.74 ppm/°C (-55°C to +125°C)
- Excellent Stability: 6 ppm/1000 Hrs. Typical
- Excellent Line Regulation: 6 ppm/V Typical
- Wide Supply Range: ±13.5 V to ±22.0 V
- Hermetic 20-terminal Ceramic LCC
- Military Processing Available

APPLICATIONS

- Precision A/D and D/A Converters
- Transducer Excitation
- Accurate Comparator Threshold Reference
- High Resolution Servo Systems
- Digital Voltmeters
- High Precision Test and Measurement Instruments

DESCRIPTION

VRE204 Series Precision Voltage References provide ultrastable +4.5 V outputs with up to ±0.8 mV initial accuracy and temperature coefficient as low as 0.74 ppm/°C over the full military temperature range.

These references are specifically designed to be used with successive-approximation type Analog-to-Digital Converters (ADCs). Specify an ADC with exceptional temperature drift, which can only be as good as the external reference used. The VRE204 combined with the right ADC will provide the lowest drift data conversion obtainable.

The VRE204 series is available in the military operating temperature range -55°C to +125°C, and two performance grades. All devices are packaged in 20-terminal LCC ceramic packages for maximum long-term stability. These “M” versions are screened for high reliability and quality.

Superior stability, accuracy, and quality make the VRE204 ideal for all precision applications which may require a 4.5 V reference. High-accuracy test and measurement instrumentation, and transducer excitation are some other applications which can benefit from the high accuracy of the VRE204.

Figure 1. BLOCK DIAGRAM

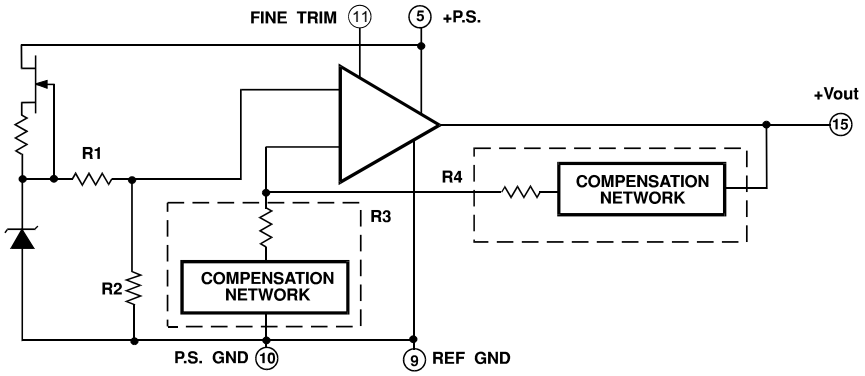

SELECTION GUIDE

Model	Output (V)	Temperature Operating Range	Volt Deviation (MAX)
VRE204M	+4.5V	-55°C to +125°C	±0.69mV
VRE204MA	+4.5V	-55°C to +125°C	±0.60mV



20-terminal Ceramic LCC
Package Style HD

Copyright © Cirrus Logic, Inc. 2009
(All Rights Reserved)

1. CHARACTERISTICS AND SPECIFICATIONS

ELECTRICAL SPECIFICATIONS

V_{PS} =+15V, T = +25°C, R_L = 10K Ω UNLESS OTHERWISE NOTED.

Model	M			MA			
Parameter	**Min**	**Typ**	**Max**	**Min**	**Typ**	**Max**	**Units**
ABSOLUTE MAXIMUM RATINGS							
Power Supply	+13.5		+22	*		*	V
Operating Temperature	-55		+125	*		*	ºC
Storage Temperature	-65		+150	*		*	ºC
Short Circuit Protection		Continuous			*		
OUTPUT VOLTAGE							
VRE204		+4.5			*		V
OUTPUT VOLTAGE ERRORS							
Initial Error			±890			±800	µV
Warmup Drift		2			1		ppm
T_{MIN} - T_{MAX} (Note1)			690			600	µV
Long-Term Stability		6			*		ppm/1000hrs.
Noise (0.1 - 10Hz)		3			*		µVpp
OUTPUT CURRENT							
Range	±10			*			mA
REGULATION							
Line		6	10		*	*	ppm/V
Load		3			*		ppm/mA
OUTPUT ADJUSTMENT							
Range		10			*		mV
Temperature Coefficient		4			*		µV/ºC/mV
POWER SUPPLY CURRENT (Note 2)							
VRE204 +PS		5	7		*	*	mA

NOTES:

* Same as M Models.

1. Using the box method, the specified value is the maximum deviation from the output voltage at 25°C over the specified operating temperature range.
2. The specified values are unloaded.

2. TYPICAL PERFORMANCE GRAPHS

V_{OUT} vs. TEMPERATURE

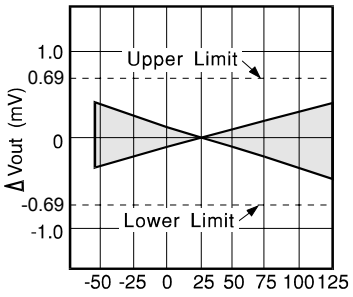

Temperature °C
VRE204M

V_{OUT} vs. TEMPERATURE

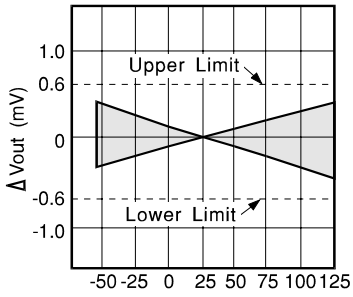

Temperature °C
VRE204MA

QUIESCENT CURRENT VS. TEMP

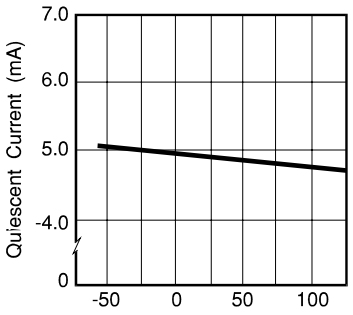

Temperature °C

JUNCTION TEMP. RISE VS OUTPUT CURRENT

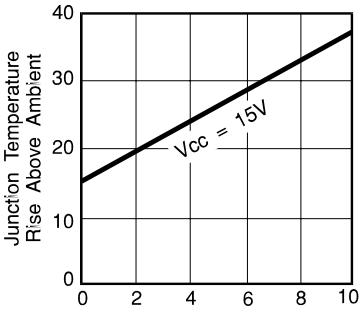

Output Current (mA)

PSRR VS. FREQUENCY

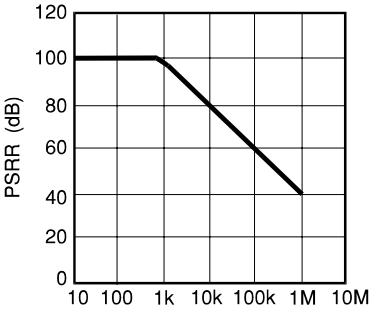

Frequency (Hz)

3. THEORY OF OPERATION

The following discussion refers to the block diagram in Figure 1. A FET current source is used to bias a 6.3 zener diode. The zener voltage is divided by the resistor network R1 and R2. This voltage is then applied to the noninverting input of the operational amplifier which amplifies the voltage to produce a 4.5 V output. The gain is determined by the resistor networks R3 and R4: G=1 + R4/R3. The 6.3 zener diode is used because it is the most stable diode over time and temperature.

The current source provides a closely regulated zener current, which determines the slope of the references' voltage vs. temperature function. By trimming the zener current a lower drift over temperature can be achieved. But since the voltage vs. temperature function is nonlinear this compensation technique is not well suited for wide temperature ranges.

A nonlinear compensation network of thermistors and resistors is used in the VRE series voltage references. This proprietary network eliminates most of the nonlinearity in the voltage vs. temperature function. By then adjusting the slope, the VRE204 series produces a very stable voltage over wide temperature ranges. This network is less than 2% of the overall network resistance so it has a negligible effect on long term stability. By using highly stable resistors in our network, we produce a voltage reference that also has very good long term stability.

4. APPLICATION INFORMATION

The proper connection of the VRE204 series voltage references with the optional trim resistors is shown below. Pay careful attention to the circuit layout to avoid noise pickup and voltage drops in the lines.

The VRE204 series voltage references have the ground terminal brought out on two pins (pin 9 and pin 10) which are connected together internally. This allows the user to achieve greater accuracy when using a socket. Voltage references have a voltage drop across their power supply ground pin due to quiescent current flowing through the contact resistance. If the contact resistance was constant with time and temperature, this voltage drop could be trimmed out. When the reference is plugged into a socket, this source of error can be as high as 20 ppm. By connecting pin 10 to the power supply ground and pin 9 to a high impedance ground point in the measurement circuit, the error due to the contact resistance can be eliminated. If the unit is soldered into place, the contact resistance is sufficiently small that it does not effect performance.

EXTERNAL CONNECTIONS

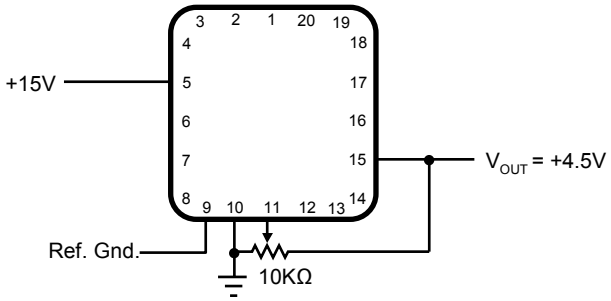

PIN CONFIGURATION

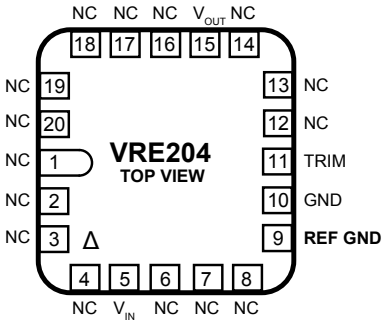

CONTACTING CIRRUS LOGIC SUPPORT

For all Apex Precision Power product questions and inquiries, call toll free 800-546-2739 in North America.
For inquiries via email, please contact apex.support@cirrus.com.
International customers can also request support by contacting their local Cirrus Logic Sales Representative.
To find the one nearest to you, go to www.cirrus.com

IMPORTANT NOTICE

Cirrus Logic, Inc. and its subsidiaries ("Cirrus") believe that the information contained in this document is accurate and reliable. However, the information is subject to change without notice and is provided "AS IS" without warranty of any kind (express or implied). Customers are advised to obtain the latest version of relevant information to verify, before placing orders, that information being relied on is current and complete. All products are sold subject to the terms and conditions of sale supplied at the time of order acknowledgment, including those pertaining to warranty, indemnification, and limitation of liability. No responsibility is assumed by Cirrus for the use of this information, including use of this information as the basis for manufacture or sale of any items, or for infringement of patents or other rights of third parties. This document is the property of Cirrus and by furnishing this information, Cirrus grants no license, express or implied under any patents, mask work rights, copyrights, trademarks, trade secrets or other intellectual property rights. Cirrus owns the copyrights associated with the information contained herein and gives consent for copies to be made of the information only for use within your organization with respect to Cirrus integrated circuits or other products of Cirrus. This consent does not extend to other copying such as copying for general distribution, advertising or promotional purposes, or for creating any work for resale.

CERTAIN APPLICATIONS USING SEMICONDUCTOR PRODUCTS MAY INVOLVE POTENTIAL RISKS OF DEATH, PERSONAL INJURY, OR SEVERE PROPERTY OR ENVIRONMENTAL DAMAGE ("CRITICAL APPLICATIONS"). CIRRUS PRODUCTS ARE NOT DESIGNED, AUTHORIZED OR WARRANTED TO BE SUITABLE FOR USE IN PRODUCTS SURGICALLY IMPLANTED INTO THE BODY, AUTOMOTIVE SAFETY OR SECURITY DEVICES, LIFE SUPPORT PRODUCTS OR OTHER CRITICAL APPLICATIONS. INCLUSION OF CIRRUS PRODUCTS IN SUCH APPLICATIONS IS UNDERSTOOD TO BE FULLY AT THE CUSTOMER'S RISK AND CIRRUS DISCLAIMS AND MAKES NO WARRANTY, EXPRESS, STATUTORY OR IMPLIED, INCLUDING THE IMPLIED WARRANTIES OF MERCHANTABILITY AND FITNESS FOR PARTICULAR PURPOSE, WITH REGARD TO ANY CIRRUS PRODUCT THAT IS USED IN SUCH A MANNER. IF THE CUSTOMER OR CUSTOMER'S CUSTOMER USES OR PERMITS THE USE OF CIRRUS PRODUCTS IN CRITICAL APPLICATIONS, CUSTOMER AGREES, BY SUCH USE, TO FULLY INDEMNIFY CIRRUS, ITS OFFICERS, DIRECTORS, EMPLOYEES, DISTRIBUTORS AND OTHER AGENTS FROM ANY AND ALL LIABILITY, INCLUDING ATTORNEYS' FEES AND COSTS, THAT MAY RESULT FROM OR ARISE IN CONNECTION WITH THESE USES.

Cirrus Logic, Cirrus, and the Cirrus Logic logo designs, Apex Precision Power, Apex and the Apex Precision Power logo designs are trademarks of Cirrus Logic, Inc. All other brand and product names in this document may be trademarks or service marks of their respective owners.