Features

- Meets VRM 10.1 and VRM 10.2 Requirements
- DAC Programmable Output Voltage
- Power Good Output
- Differential Remote Sense
- Remote Enable
- Supervisory Functions
  - Output Overcurrent
  - Short Circuit Protection
  - Overtemperature Indicator
  - Output Current Level Signal
- Tri-state Output when Disabled
- Dynamic VID Capability



Table 1:

Input Characteristics	Notes and Conditions (1)	Min	Typ	Max	Units
Input Voltage Operating Range		11.4	12.0	12.60	Vdc
Input Undervoltage Lockout	Turn-on Threshold	9.7		11.0	Vdc
	Turn-off Threshold	9.0		10.3	Vdc
	Hysteresis Voltage	0.7		1.0	Vdc
Maximum Input Current	Typical: 130A 1.325VID Max: 150A 1.6VID		19	 22	A
No-Load Input Current	Enable state, no Load	200	320	400	mA
Disabled Input Current	Disabled State	20	30	50	mA
Enable - Positive Logic Version	On State Range	0.8		5.0	Vdc
	Off State Range	-0.3		0.4	Vdc

Table 2:

Output Characteristics	Notes and Conditions (1)	Min	Typ	Max	Units
Output Voltage Set Point	6-Bit DAC Controlled	0.8375		1.600	Vdc
Output Line Regulation		-5	0	5	mV
Output Load Regulation			1.25		mΩ
Output Voltage Total Regulation				VID-40	mV
Output Ripple Voltage & Noise (2)	20 MHz Bandwidth		6.4		mVp-p
Output Current Operating Range		0		150	A
Efficiency	Io = 130 Amps VID = 1.325	83	85		%
Turn-on Time	Vin present: Enable to 90% Vout			50	mS
Transient Response (3)	100A step, 100A/µS, ΔVo	115		135	mV
Remote Sense Compensation Range (4)				300	mV
Recommended Bulk Output Capacitance	UCC 4PS560MH11 or equivalent		14		EA

Table 3:

Protection Characteristics	Notes and Conditions (1)	Min	Typ	Max	Units
Output Overcurrent Shutdown	Latching	155		205	A
Overvoltage Shutdown	Above VID	90		200	mV
Overtemperature Indicator	Non-Latching, at hot spots Worst case junction temperature		135		°C
Load Indicator	VID = 1.325, 0 A Load VID = 1.325, 100 A Load VID = 1.325, 150A Load		0 2 3		V

Table 4:

General Characteristics	Notes and Conditions (1)	Min	Typ	Max	Units
Storage Temperature Range	Non-condensing	-40		70	°C
Operating Temperature Range		0		60	°C
Semiconductor Junction Temperature	Package rated to 150°C			110	°C
Material Flammability	UL 94V-0				
MTBF	Calculated (RAC PRISM) @ 45°C		1.22		$x10^6$ Hrs
Switching Frequency	Per phase		300		KHz
Dimensions	3.8”L x 2.5”H x 0.870”W				
Weight			103		g

Notes:

1. Vin = 12Vdc, Ta = 25°C, Airflow = 400LFM unless otherwise noted.
2. Output Ripple Voltage is specified when measured with Intel specified capacitance at the output of the converter.
3. Transient response is specified with Intel specified capacitors at the output of the converter.
4. If remote sense is not required or used, the Sense(+) and Sense(-) pins must be connected to Vo(+) and Vo(-) respectively.
5. VRM_PRES and VRM_ID are connected to Vss on the VRM.

Mechanical Information

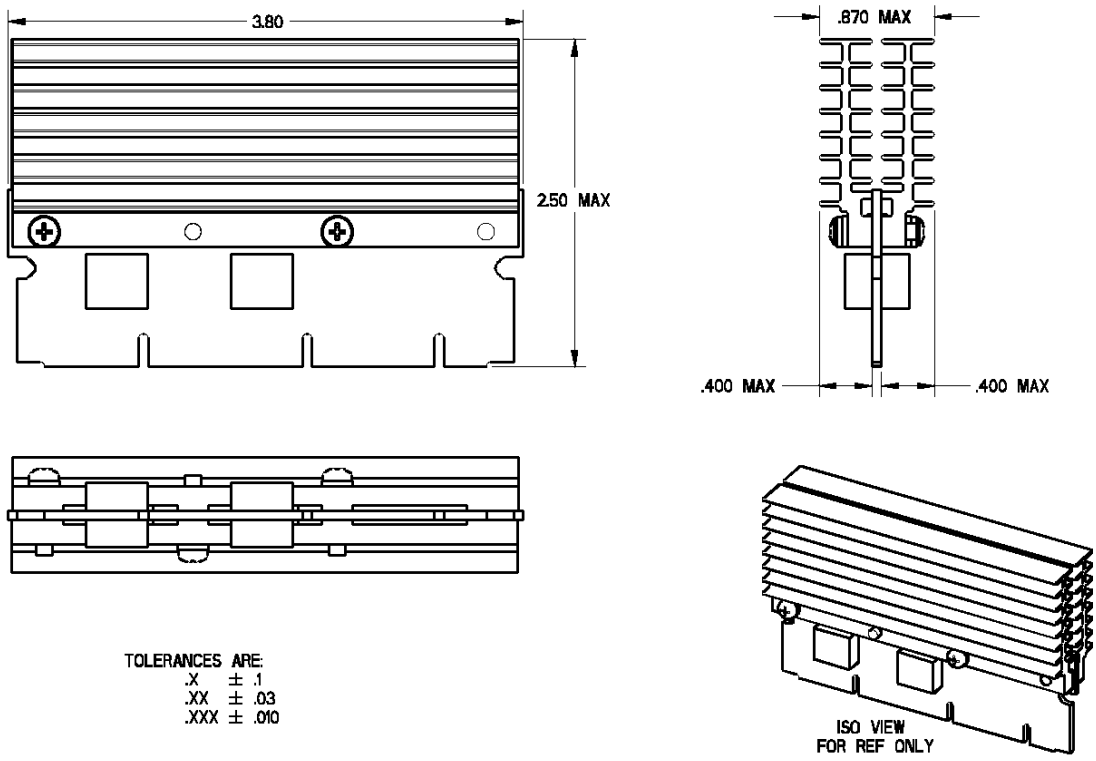

Figure 1

Recommended Interface Connector Options

Tyco/Elcon	283-0172-01303 (Solder Tail, Long)
	283-0172-02303 (Solder Tail, Short)
	284-0202-03003 (Surface Mount)

Pin Assignment

	1	VSS		54	VIN+		
	2	VSS		53	VIN+		
	3	VSS		52	VIN+		
	4	VID4		51	VID3		
	5	VID2		50	VID1		
	6	VID0		49	VID5		
	7	Vo_sen+		48	VO_SEN-		
	8	PWRGD		47	VR_HOT		
	9	OUTEN		46	LL0		
	10	Load Current		45	LL1		
	11	VRM ID		44	N/C		
(5)	12	VRM_Pres		43	N/C	(5)	
	13	VO+		42	VO+		
	14	VO+		41	VO+		
	15	VO+		40	VO+		
	16	VSS		39	VSS		
	17	VSS		38	VSS		
	18	VSS		37	VSS		
	19	VO+		36	VO+		
	20	VO+		35	VO+		
	21	VO+		34	VO+		
	22	VSS		33	VSS		
	23	VSS		32	VSS		
	24	VSS		31	VSS		
	25	VO+		30	VO+		
	26	VO+		29	VO+		
	27	VO+		28	VO+		

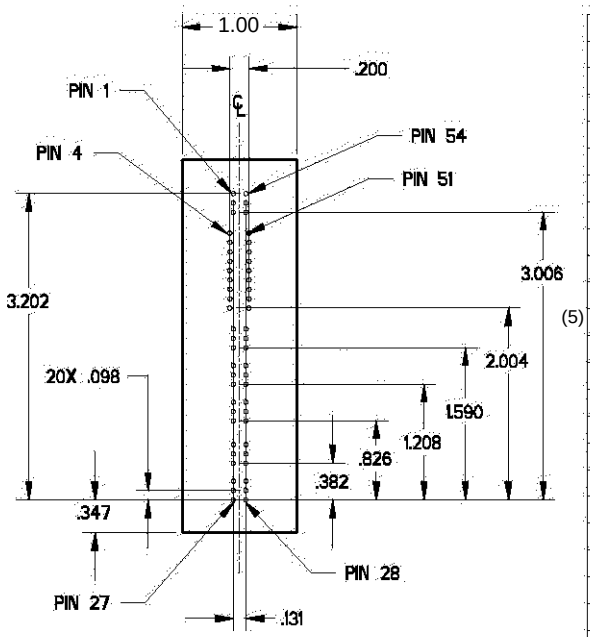

Figure 2

Derating Curves

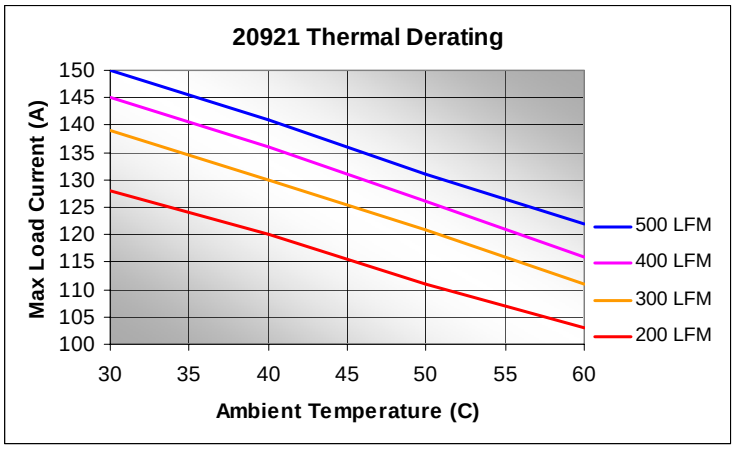

Ordering Information

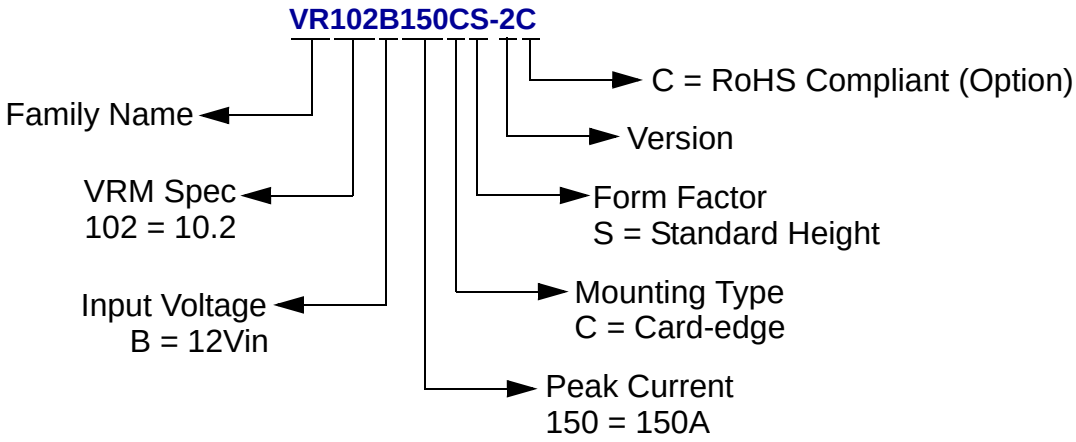

RoHS Compliancy

The VR102B150CS-2C is in compliance with the European Union Directive 2002/95/EC (RoHS) with respect to the following substances: lead (Pb), cadmium (Cd), mercury (Hg), hexavalent chromium, polybrominated biphenyls (PBB) or polybrominated diphenyl ethers (PBDE).

RoHS Process Note

This product is not intended to go through a reflow solder process. See recommended interface connector options.

C&D Technologies, Inc. reserves the right to alter or improve the specification, internal design or manufacturing process at any time, without notice. Please check with your supplier or visit our website to ensure that you have the current and complete specification for your product before use.

© C&D Technologies, Inc. 2004

No part of this publication may be copied, transmitted, or stored in a retrieval system or reproduced in any way including, but not limited to, photography, photocopy, magnetic or other recording means, without prior written permission from C&D Technologies, Inc.

Instructions for use are available from: www.cd4power.com

4118 14th Avenue, Unit 4
Markham, Ontario L3R 0J3
1-905-944-2850

www.cd4power.com

4607 S.E. International Way
Milwaukie, Oregon 97222
1-971-206-2800