TOLERANCE UNLESS SPECIFIED =	.XXX= +/- .005	.XX= +/- .015	FRACTIONS= +/- .032

VPP12-400.DC2

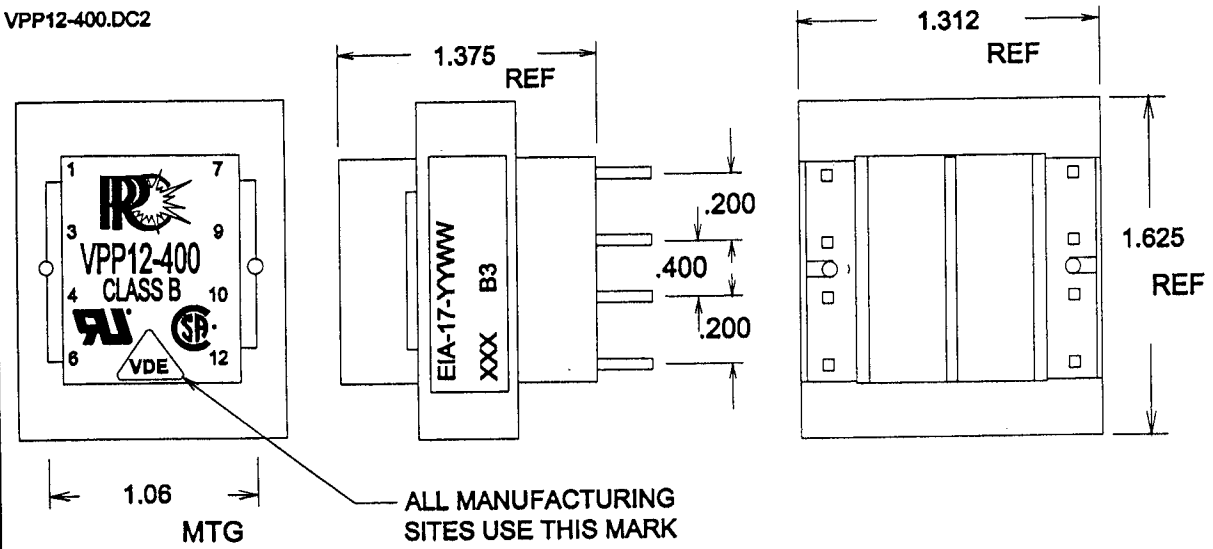

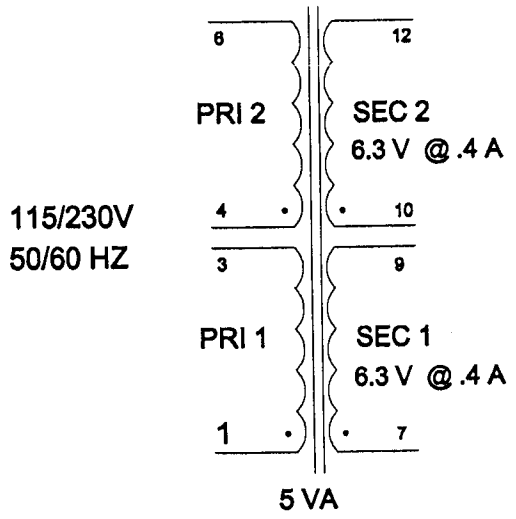

PC PINS .025 SQ

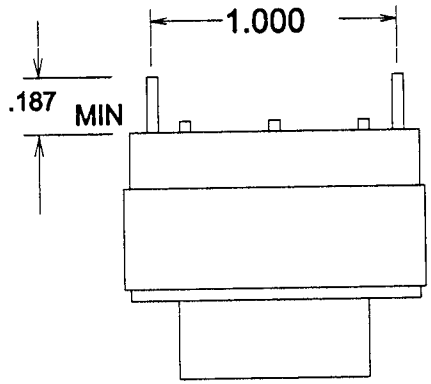

PRODUCTION TESTS

TURNS RATIO =	100%	
DC RESISTANCE IN OHMS	1-3 =	340 NOM
	4-6 =	408 NOM
	7-9 =	1.85 NOM
	10-12 =	2.2 NOM

MAX EXCITATION CURRENT = .016 A

APPLY 230V 60HZ 1-6 (3+4)

PRI WDGS 114.5 TO 115.5 V

SEC WDGS 7.9 TO 8.5 V

HIPOT: 4000V P-S

4000V P,S, TO CORE

600V P-P, S-S

CONTINUITY = PRI'S 100% IN FINAL

IMPREGNATION NOTES: PREHEAT 2 HRS

PINS TO BE FREE OF IMPREGNATION

FINAL ASSEMBLY NOTES

METHOD 1 X 1
LEAVE OFF LAST "I" PCS

MARKING SEE LABEL DETAIL ABOVE
APPLY PART NO. LABEL, AFTER IMPREGNATION

PART NO. : VPP12-400

2-400 RK 0.XLS