TRIAD MAGNETICS

POWER TRANSFORMER CHASSIS MOUNT : TOROIDAL MEDICAL SERIES

VPM240-1040



Photo for illustration only

Description:

The toroidal construction inherently reduces stray fields, increases efficiency and minimizes size compared to traditional EI transformers. The addition of a Flux Band further reduces the remaining stray fields. The shield between Primary and Secondary improves safety, reduces common mode signals and minimizes leakage current. Built with a Class F (155°) insulation system. A 140°C self-resetting thermal switch is included in each primary.

Electrical Specifications (@25C)

1. Maximum Power: 250VA
2. Input Voltages: 100, 120, 220, 240VAC, 50/60Hz
3. Output Voltages: 120VAC @2.08A or 240VAC CT @ 1.04A
4. Voltage Regulation: 5.9% TYP from full load to no load
5. Temperature Rise: 55°C TYP
6. Hipot: 4000VAC, Primary to Secondary, Primary & Secondary to Shield & mounting surface
7. Efficiency: 94% TYP. @ full load

Agency File:

UL: File E122529, UL 60601-1/(R) 2012 Medical Electrical Equipment – Part 1
CE: ES 60601-1 (IEC 60601-1:2005, MOD)
cUL: C22.2 No. 60601-1:14, Medical Electrical Equipment – Part 1
CB Certified.



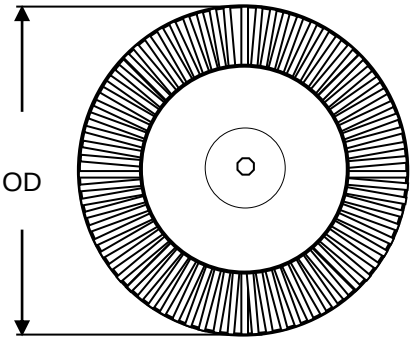

Dimensions: Inches (mm)

O.D.	I.D.	HT.*
4.8 (123)	1.8(45)	2.4(60)

*Add 0.188 (3) to the height for mounting hardware

Weight: 2.5Kg

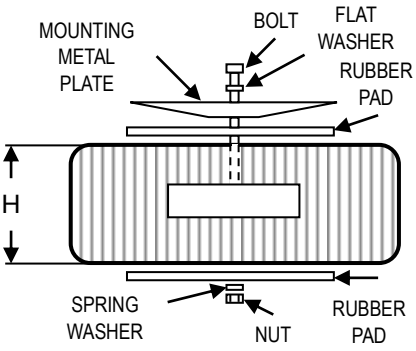

Mounting:

Transformer is provided with one metal mounting plate, two rubber pads, M6 x 65mm bolt, nut, spring and flat washer.

Connections:

Transformer is provided with 8" (203mm) long, 0.25" (6.35mm) stripped and tinned, stranded UL 1015 lead wire. Primaries are 20AWG, Secondaries are 20AWG, and Shield is 20AWG.
The GRN/YEL shield lead is typically grounded. Do not lift transformer by leads!

Input Options:

- **100VAC:** Input to Gray & Blue, jumper White & Brown, jumper Blue & Violet.
- **120VAC:** Input to White & Blue, jumper White & Brown, jumper Blue & Violet.
- **220VAC:** Input to Gray & Violet, jumper Blue & Brown
- **240VAC:** Input to White and Violet, jumper Blue & Brown

Output Options:

- **120VAC:** Output from Black & Red, jumper Black & Orange, jumper Red to Yellow
- **240VAC**: Output from Black & Yellow, jumper Red & Orange

Primary and secondary windings are designed to be connected in series or parallel. Windings are not intended to be used independently.

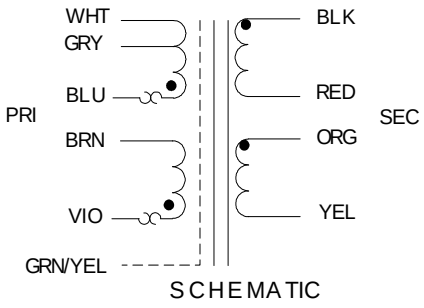

SCHEMATIC

RoHS Compliance: Meets the requirements of 2011/65/EU, known as the RoHS 2 initiative.

* At printing, this document is considered "uncontrolled". Contact Triad Magnetics' website for current version

Web: www.TriadMagnetics.com
Phone 951-277-0757
Fax 951-277-2757

460 Harley Knox Blvd.
Perris, California 92571

Publish Date: June 19, 2015