P/N: VP3119 DATA SHEET

Feature



- Designed for 10/100 MB/s transmission over UTP-5 cable.
- Cable interface for isolation and low common mode Emissions.
- Tested & qualified for use with national semiconductor's DP83840 Ethernet 10/100 PHY chip.
- 16-PIN DIP package for economic cost.
- Operating Temperature range: 0℃ to +70℃.
- Storage temperature range: -25℃to +125℃.

Electrical Specifications @ 25°C

Part Number	Turns Ratio (±5%)		OCL (uH Min) @ 100KHz/0.1Vrms with 8mA/DC Bias	Rise Time (10-90%) nS TYP	HI-POT (Vrms)
	TX	RX			
VP3119	1CT:1CT	1CT:1CT	350	2.5	1500

Continue

Part Number	Insertion Loss (dB Max)	Return Loss (dB Min)					Cross talk (dB Min)		DCMR TX/RX(dB Min)		
	0.3-100 MHz	30MHz	40MHz	50MHz	60MHz	80MHz	0.3-60MHz	60-100MHz	0.3-30MHz	60MHz	100MHz
VP3119	-1.15	-16	-14	-13.5	-13	-12	-45	-35	-42/-40	-35/-30	-28/-25

Schematic

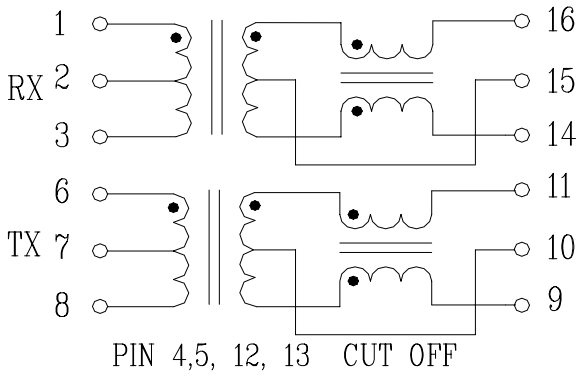

Mechanical

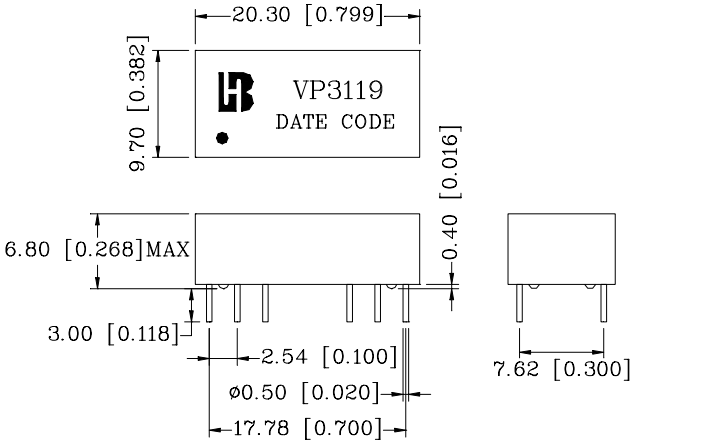

Units: mm[Inches] Tolerances: xx.x0±0.25[0.010]
0.xx±0.05[0.002]