Position Sensors

ADAPTOR SET

(VOS2T-R use)

Functions & Features

• Used to replace the VOS-R Series with the VOS2T-R

• Adaptor plate with a dedicated lever adjusts the mounting hole positions of the two models without need for extra fitting

• Link Set (model: VOLK) connecting the VOS-R with a valve can be also used

MODEL: VOAR-[1]

ORDERING INFORMATION

• Code number: VOAR-[1]

Specify a code from below for [1].

(e.g. VOAR-A)

[1] LEVER

A: Attached to the upper side
Effective radius 24 – 40 mm (0.94” – 1.57”)
B: Attached to the upper side
Effective radius 35 – 80 mm (1.38” – 3.15”)
C: Attached to the upper side
Effective radius 40 – 130 mm (1.57” – 5.12”)
D: Attached to the lower side
Effective radius 15 – 40 mm (0.59” – 1.57”)
E: Attached to the lower side
Effective radius 35 – 80 mm (1.38” – 3.15”)
F: Attached to the lower side
Effective radius 40 – 130 mm (1.57” – 5.12”)

GENERAL SPECIFICATIONS

Materials

Lever: Stainless steel
Adaptor plate: Aluminium alloy
Adaptor’s surface treatment: Anodizing

INSTALLATION

Weight: 175 g (0.39 lb)

DIMENSIONS unit: mm (inch)

• Lever Attached to the Upper Side

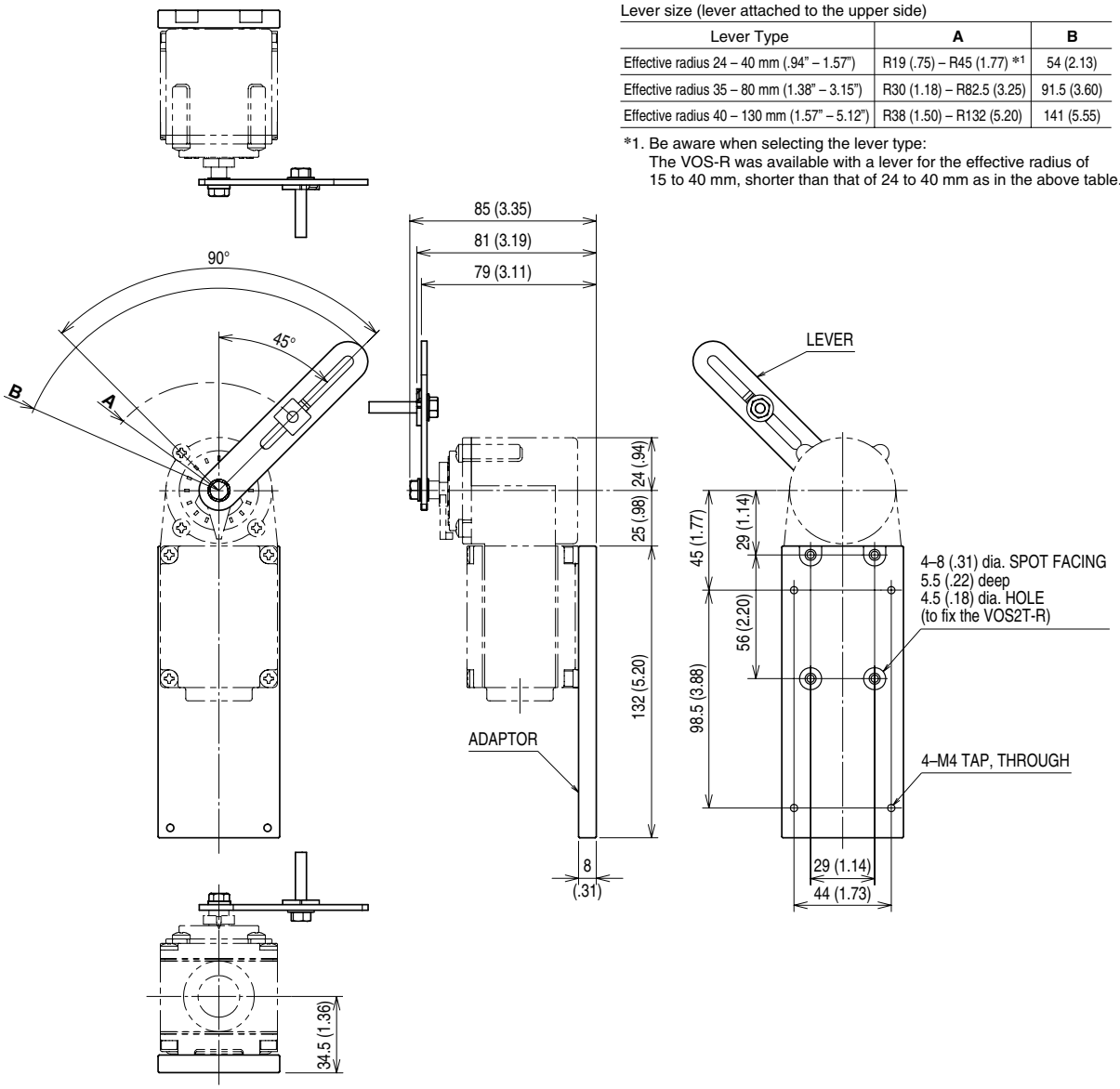

Lever size (lever attached to the upper side)

Lever Type	A	B
Effective radius 24 – 40 mm (.94" – 1.57")	R19 (.75) – R45 (1.77) *1	54 (2.13)
Effective radius 35 – 80 mm (1.38" – 3.15")	R30 (1.18) – R82.5 (3.25)	91.5 (3.60)
Effective radius 40 – 130 mm (1.57" – 5.12")	R38 (1.50) – R132 (5.20)	141 (5.55)

*1. Be aware when selecting the lever type:
The VOS-R was available with a lever for the effective radius of 15 to 40 mm, shorter than that of 24 to 40 mm as in the above table.

• Lever Attached to the Lower Side

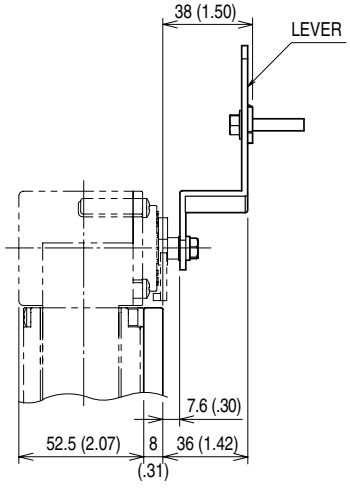

Lever size (lever attached to the lower side)

Lever Type	A	B
Effective radius 15 – 40 mm (.59" – 1.57")	R12 (.47) – R45 (1.77)	54 (2.13)
Effective radius 35 – 80 mm (1.38" – 3.15")	R30 (1.18) – R82.5 (3.25)	91.5 (3.60)
Effective radius 40 – 130 mm (1.57" – 5.12")	R38 (1.50) – R132 (5.20)	141 (5.55)

⚠ Specifications are subject to change without notice.