VNQ5050K-E

QUAD CHANNEL HIGH SIDE DRIVER FOR AUTOMOTIVE APPLICATIONS

ADVANCE DATA

Table 1. General Features

TYPE	V_{CC}	$R_{DS(on)}$	I_{out}
VNQ5050K-E	41V	50mΩ (*)	12A

(*) Per channel

- OUTPUT CURRENT: 12A
- 3.0 V CMOS COMPATIBLE INPUT
- STATUS DISABLE
- ON STATE OPEN LOAD DETECTION
- OFF STATE OPEN LOAD DETECTION
- OUTPUT STUCK TO V_{CC} DETECTION
- OPEN DRAIN STATUS OUTPUT
- UNDERVOLTAGE SHUT-DOWN
- OVERVOLTAGE CLAMP
- THERMAL SHUT DOWN
- CURRENT AND POWER LIMITATION
- VERY LOW STAND-BY CURRENT
- PROTECTION AGAINST LOSS OF GROUND AND LOSS OF V_{CC}
- VERY LOW ELECTROMAGNETIC SUSCEPTIBILITY
- OPTIMIZED ELECTROMAGNETIC EMISSION
- REVERSE BATTERY PROTECTION (**)
- IN COMPLIANCE WITH THE 2002/95/EC EUROPEAN DIRECTIVE

Figure 1. Package

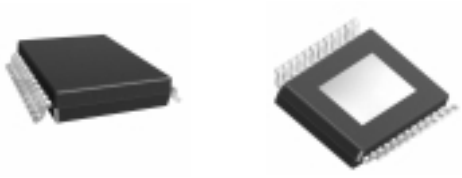

PowerSSO-24

DESCRIPTION

The VNQ5050K-E is a monolithic device made using STMicroelectronics VIPower technology. It is intended for driving resistive or inductive loads with one side connected to ground. Active V_{CC} pin voltage clamp protects the device against low energy spikes (see ISO7637 transient compatibility table).

The device detects open load condition both in on and off state, when STAT_DIS is left open or driven low. Output shorted to V_{CC} is detected in the off state.

When STAT_DIS is driven high, the STATUS pin is in a high impedance condition.

Output current limitation protects the device in overload condition. In case of long duration overload, the device limits the dissipated power to safe level up to thermal shut-down intervention. . Thermal shut-down with automatic restart allows the device to recover normal operation as soon as fault condition disappears.

Table 2. Order Codes

Package	Tube	Tape and Reel
PowerSSO-24	VNQ5050K-E	VNQ5050KTR-E

Note: (**) See application schematic at page 9.

This is preliminary information on a new product now in development. Details are subject to change without notice.

Figure 2. Block Diagram

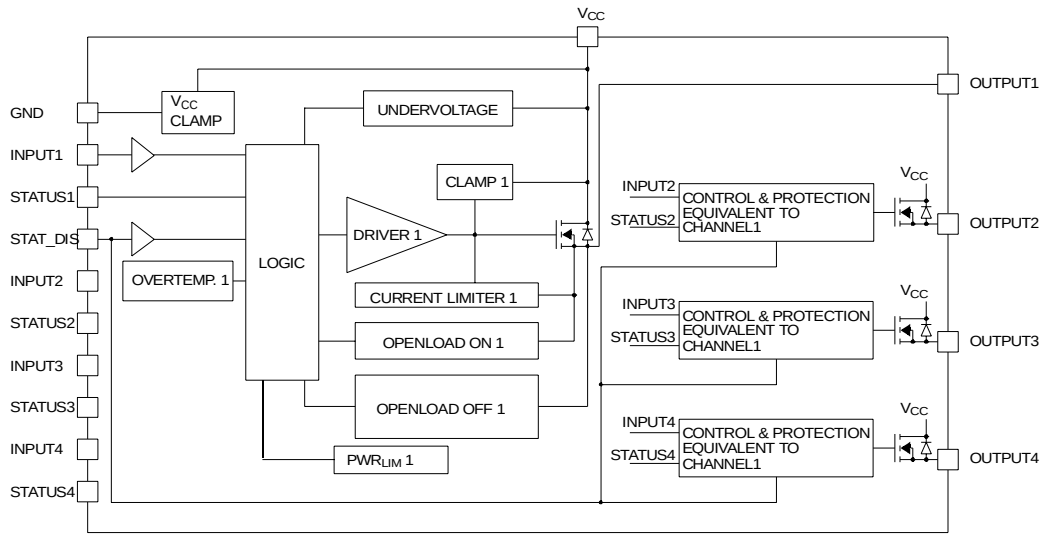

Table 3. Pin Function

Name	Function
V_{CC}	Battery connection
OUTPUTn	Power output
GND	Ground connection. Must be reverse battery protected by an external diode/resistor network
INPUTn	Voltage controlled input pin with hysteresis, CMOS compatible. Controls output switch state
STATUSn	Open drain digital diagnostic pin
STAT_DIS	Active high CMOS compatible pin, to disable the STATUS pin

Figure 3. Current and Voltage Conventions

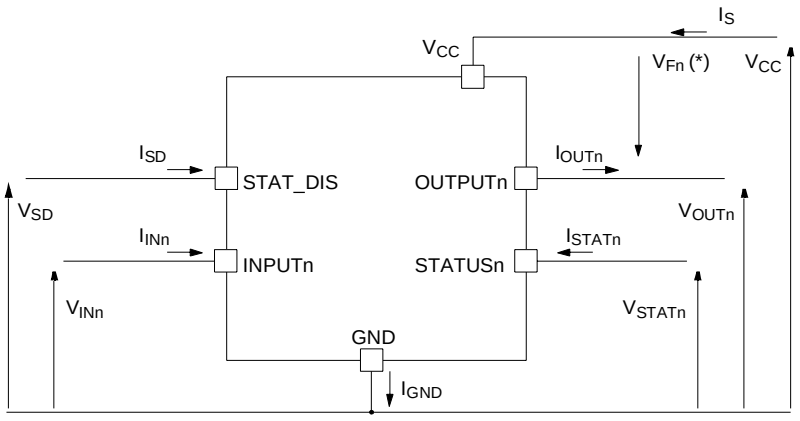

(*) $V_{Fn} = V_{CC} - V_{OUTn}$ during reverse battery condition

Figure 4. Configuration Diagram (Top View) & Suggested Connections For Unused and n.c. Pins

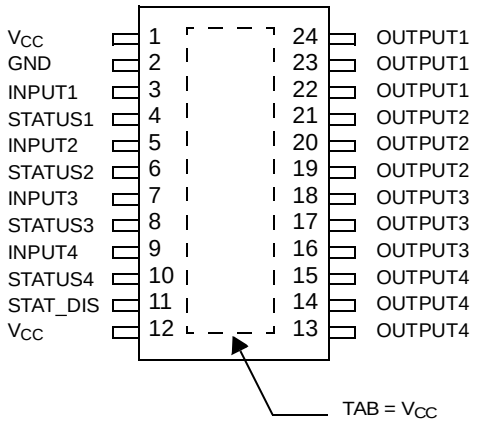

Connection / Pin	Status	N.C.	Output	Input
Floating	X	X	X	X
To Ground		X		Through 10KΩ resistor

Table 4. Absolute Maximum Ratings

Symbol	Parameter	Value	Unit
V_{CC}	DC Supply Voltage	41	V
- V_{CC}	Reverse DC Supply Voltage	- 0.3	V
- I_{GND}	DC Reverse Ground Pin Current	- 200	mA
I_{OUT}	DC Output Current	Internally Limited	A
- I_{OUT}	Reverse DC Output Current	- 15	A
I_{IN}	DC Input Current	+10/-1	mA
I_{STAT}	DC Status Current	+10/-1	mA
V_{ESD}	Electrostatic discharge (R=1.5kΩ; C=100pF)	2000	V
T_j	Junction Operating Temperature	-40 to 150	°C
T_{stg}	Storage Temperature	- 55 to 150	°C

Table 5. Thermal Data

Symbol	Parameter	Value	Unit
$R_{thj\text{-}case}$	Thermal Resistance Junction-case	1.7	°C/W
$R_{thj\text{-}amb}$	Thermal Resistance Junction-ambient	52 (1)	°C/W

Note: 1. When mounted on a standard single-sided FR-4 board with 1 cm^2 of Cu (at least 35µm thick) connected to TAB.

ELECTRICAL CHARACTERISTICS (8V<V_{CC}<36V; -40°C< T_j <150°C, unless otherwise specified)

Table 6. Power Section

Symbol	Parameter	Test Conditions	Min.	Typ.	Max.	Unit
V_{CC}	Operating supply voltage		4.5	13	36	V
V_{USD}	Undervoltage shut-down			3	4.5	V
$V_{USDhyst}$	Undervoltage shut-down hysteresis			0.5		V
R_{ON} (**)	On state resistance	I_{OUT}=2A; T_j=25°C I_{OUT}=2A; T_j=150°C I_{OUT}=2A; V_{CC}=5V; T_j=25°C			50 100 65	mΩ mΩ mΩ
V_{clamp}	Clamp Voltage	I_S=20 mA	41	46	52	V
I_S	Supply current	Off State; V_{CC}=13V; V_{IN}=V_{OUT}=0V; T_j=25°C On State; V_{IN}=5V; V_{CC}=13V; I_{OUT}=0A		2 (2) 8	5 (2) 14	µA mA
$I_{L(off1)}$ (**)	Off state output current	V_{IN}=V_{OUT}=0V; V_{CC}=13V; T_j=25°C V_{IN}=V_{OUT}=0V; V_{CC}=13V; T_j=125°C	0 0		3 5	µA µA
$I_{L(off2)}$ (**)	Off state output current	V_{IN}=0V; V_{OUT}= 4V	-75		0	µA

Note: (**) Per each channel.

Note: 2. PowerMOS leakage included.

Table 7. Switching (V_{CC}=13V)

Symbol	Parameter	Test Conditions	Min.	Typ.	Max.	Unit
$t_{d(on)}$	Turn-on Delay Time	R_L=6.5Ω		15		µs
$t_{d(off)}$	Turn-off Delay Time	R_L=6.5Ω		40		µs
$dV_{OUT}/dt_{(on)}$	Turn-on Voltage Slope	R_L=6.5Ω		0.3		V/µs
$dV_{OUT}/dt_{(off)}$	Turn-off Voltage Slope	R_L=6.5Ω		0.35		V/µs
W_{ON}	Switching energy losses at turn-on	R_L=6.5Ω		TBD		mJ
W_{OFF}	Switching energy losses at turn-off	R_L=6.5Ω		TBD		mJ

ELECTRICAL CHARACTERISTICS (continued)

Table 8. Status Pin (V_{SD}=0)

Symbol	Parameter	Test Conditions	Min	Typ	Max	Unit
V_{STAT}	Status Low Output Voltage	I_{STAT}= 1.6 mA, V_{SD}=0V			0.5	V
I_{LSTAT}	Status Leakage Current	Normal Operation or V_{SD}=5V, V_{STAT}= 5V			10	µA
C_{STAT}	Status Pin Input Capacitance	Normal Operation or V_{SD}=5V, V_{STAT}= 5V			100	pF
V_{SCL}	Status Clamp Voltage	I_{STAT}= 1mA I_{STAT}= - 1mA	5.5	 -0.7	TBD	V V

Table 9. Protections (see note 3)

Symbol	Parameter	Test Conditions	Min.	Typ.	Max.	Unit
I_{limH}	DC Short circuit current	V_{CC}=13V 5V<V_{CC}<36V	12	18	24 24	A A
I_{limL}	Short circuit current during thermal cycling	V_{CC}=13V T_R<T_j<T_{TSD}		7		A
T_{TSD}	Shutdown temperature		150	175	200	°C
T_R	Reset temperature		T_{RS} + 1	T_{RS} + 5		°C
T_{RS}	Thermal reset of STATUS		135			°C
T_{HYST}	Thermal hysteresis (T_{TSD}-T_R)			7		°C
t_{SDL}	Status Delay in Overload Conditions	T_j>T_{TSD}			20	µs
V_{DEMAG}	Turn-off output voltage clamp	I_{OUT}=2A; V_{IN}=0; L=6mH	V_{CC}-41	V_{CC}-46	V_{CC}-52	V
V_{ON}	Output voltage drop limitation	I_{OUT}=0.1A (see fig. 6) T_j= -40°C...+150°C		25		mV

Note: 3. To ensure long term reliability under heavy overload or short circuit conditions, protection and related diagnostic signals must be used together with a proper software strategy. If the device is subjected to abnormal conditions, this software must limit the duration and number of activation cycles

Table 10. Openload Detection

Symbol	Parameter	Test Conditions	Min	Typ	Max	Unit
I_{OL}	Openload ON State Detection Threshold	V_{IN} = 5V , 8V<Vcc<18V	10	40	70	mA
$t_{DOL(on)}$	Openload ON State Detection Delay	I_{OUT} = 0A, V_{CC}=13V			200	µs
t_{POL}	Delay between INPUT falling edge and STATUS rising edge in Openload condition	I_{OUT} = 0A	200	500	1000	µs
V_{OL}	Openload OFF State Voltage Detection Threshold	V_{IN} = 0V, 8V<V_{CC}<16V	2	3	4	V
t_{DSTKON}	Output Short Circuit to V_{cc} Detection Delay at Turn Off		180		t_{POL}	µs

Figure 5.

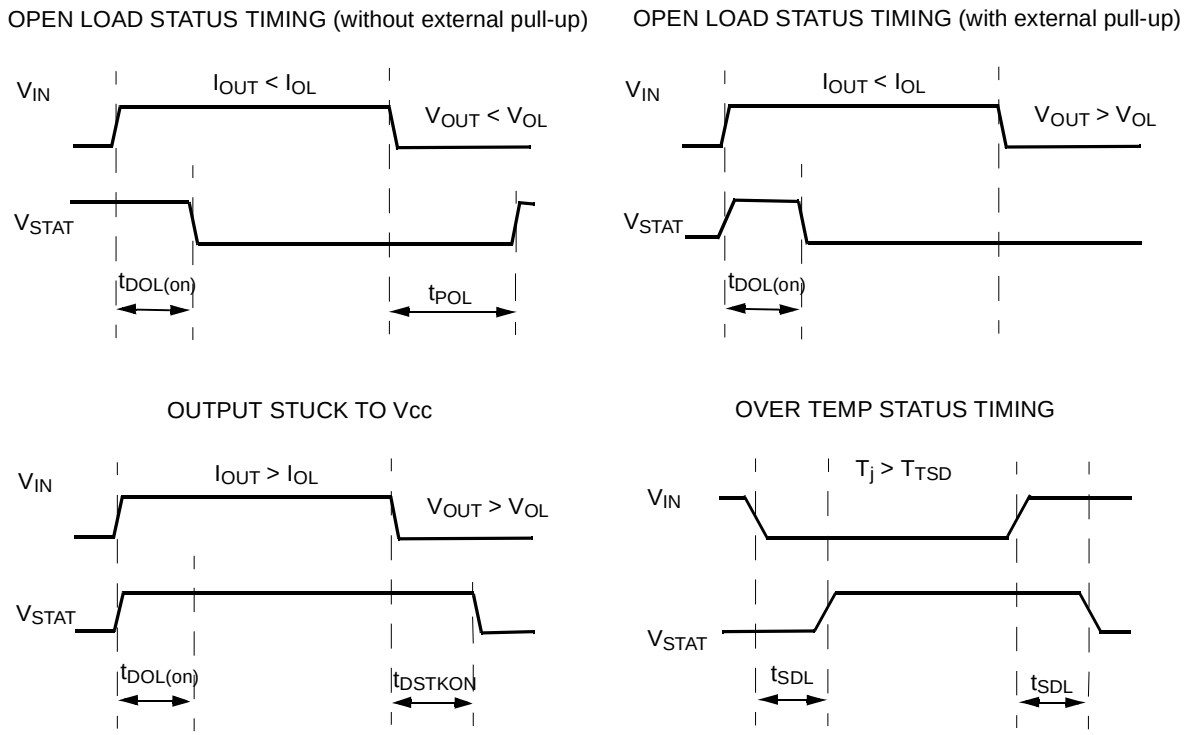

Figure 6.

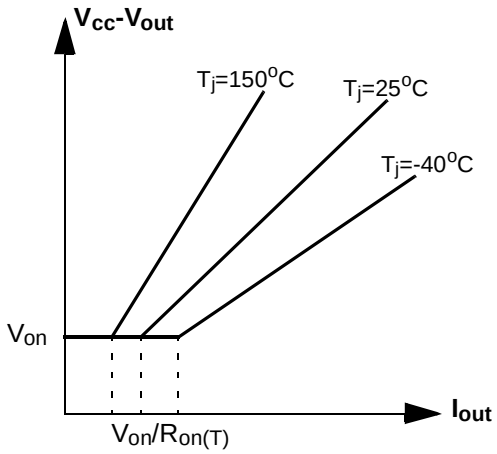

ELECTRICAL CHARACTERISTICS (continued)

Table 11. Logic Input

Symbol	Parameter	Test Conditions	Min.	Typ.	Max.	Unit
V_{IL}	Input Low Level				0.9	V
I_{IL}	Low Level Input Current	V_{IN} = 0.9V	1			µA
V_{IH}	Input High Level		2.1			V
I_{IH}	High Level Input Current	V_{IN} = 2.1V			10	µA
$V_{I(hyst)}$	Input Hysteresis Voltage		0.25			V
V_{ICL}	Input Clamp Voltage	I_{IN} = 1mA I_{IN} = -1mA	5.5	 -0.7	TBD	V V
V_{SDL}	STAT_DIS low level voltage				0.9	V
I_{SDL}	Low level STAT_DIS current	V_{SD}=0.9V	1			µA
V_{SDH}	STAT_DIS high level voltage		2.1			V
I_{SDH}	High level STAT_DIS current	V_{SD}=2.1V			10	µA
$V_{SD(hyst)}$	STAT_DIS hysteresis voltage		0.25			V
V_{SDCL}	STAT_DIS clamp voltage	I_{SD}=1mA I_{SD}=-1mA	5.5	 -0.7	TBD	V V

Table 12. Truth Table

CONDITIONS	INPUTn	OUTPUTn	STATUSn (V_{SD}=0V) (1)
Normal Operation	L H	L H	H H
Current Limitation	L H	L X	H H
Overtemperature	L H	L L	H L
Undervoltage	L H	L L	X X
Output Voltage > V_{OL}	L H	H H	L(2) H
Output Current < I_{OL}	L H	L H	H(3) L

Note: 1. If the V_{SD} is high, the STATUS pin is in a high impedance.
2. The STATUS pin is low with a delay equal to t_{DSTKON} after INPUT falling edge.
3. The STATUS pin becomes high with a delay equal to t_{POL} after INPUT falling edge.

Figure 7. Switching Characteristics

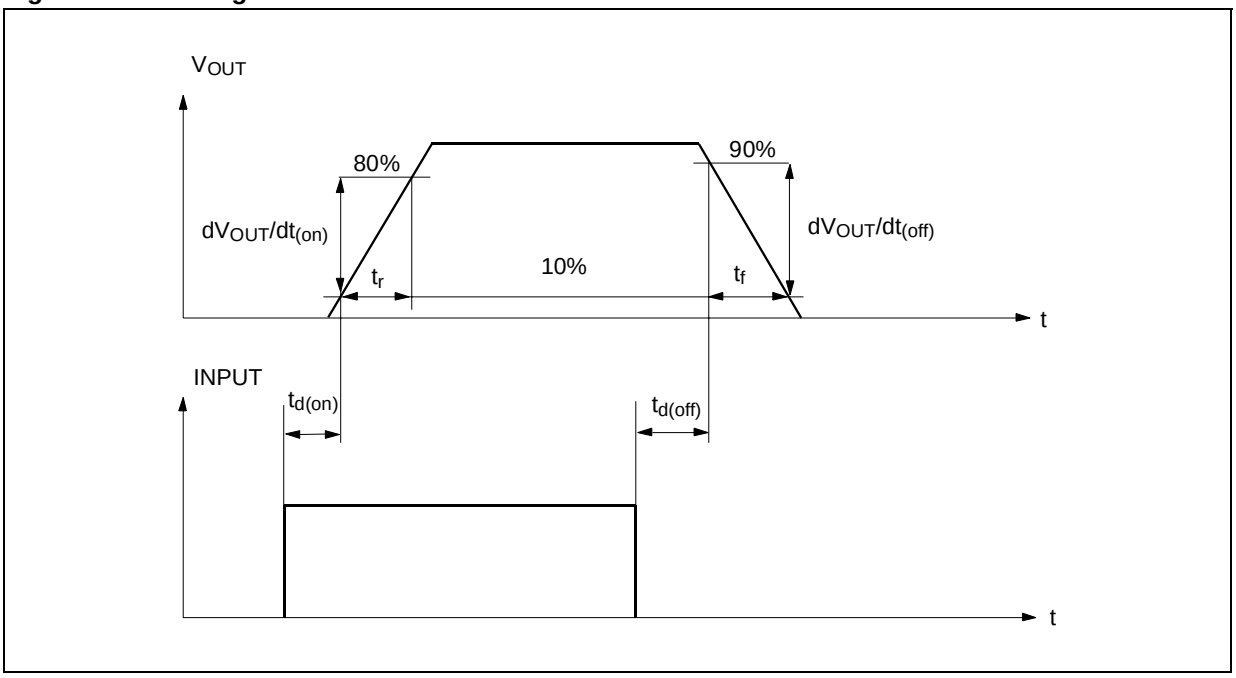

Table 13. Electrical Transient Requirements

ISO T/R 7637/1 Test Pulse	TEST LEVELS				
	I	II	III	IV	Delays and Impedance
1	-25 V	-50 V	-75 V	-100 V	2 ms 10 Ω
2	+25 V	+50 V	+75 V	+100 V	0.2 ms 10 Ω
3a	-25 V	-50 V	-100 V	-150 V	0.1 µs 50 Ω
3b	+25 V	+50 V	+75 V	+100 V	0.1 µs 50 Ω
4	-4 V	-5 V	-6 V	-7 V	100 ms, 0.01 Ω
5	+26.5 V	+46.5 V	+66.5 V	+86.5 V	400 ms, 2 Ω

ISO T/R 7637/1 Test Pulse	TEST LEVELS RESULTS			
	I	II	III	IV
1	C	C	C	C
2	C	C	C	C
3a	C	C	C	C
3b	C	C	C	C
4	C	C	C	C
5	C	E	E	E

CLASS	CONTENTS
C	All functions of the device are performed as designed after exposure to disturbance.
E	One or more functions of the device are not performed as designed after exposure to disturbance and cannot be returned to proper operation without replacing the device.

Figure 8. Application Schematic

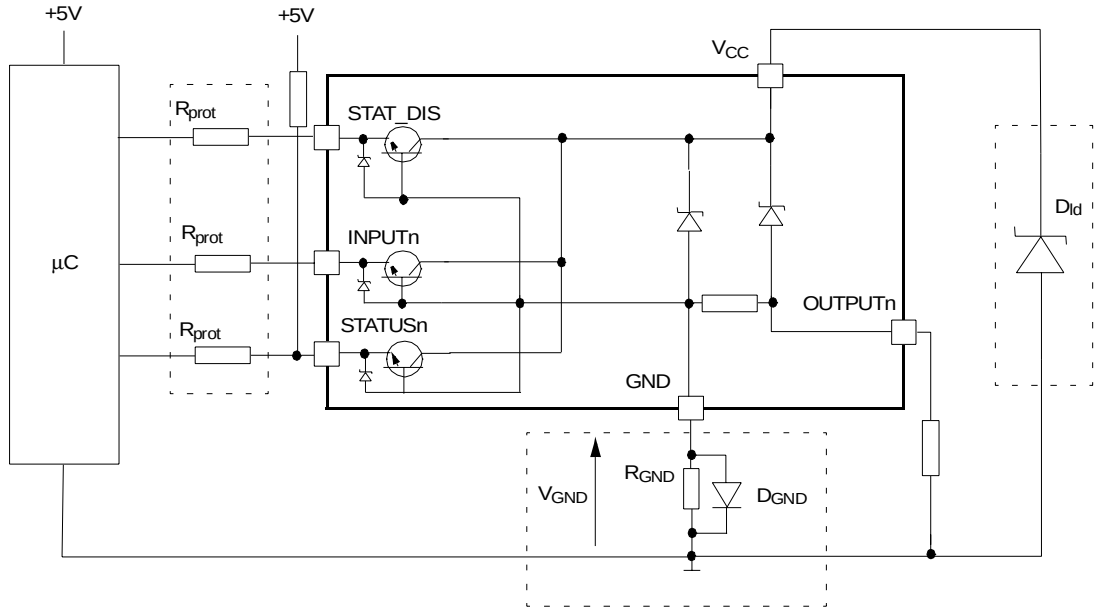

Note: Channels 2, 3 and 4 have the same internal circuit as channel 1.

GND PROTECTION NETWORK AGAINST REVERSE BATTERY

Solution 1: Resistor in the ground line (R_{GND} only). This can be used with any type of load.

The following is an indication on how to dimension the R_{GND} resistor.

1) $R_{GND} \leq 600mV / (I_{S(on)max})$.

2) $R_{GND} \geq (-V_{CC}) / (-I_{GND})$

where $-I_{GND}$ is the DC reverse ground pin current and can be found in the absolute maximum rating section of the device datasheet.

Power Dissipation in R_{GND} (when V_{CC}<0: during reverse battery situations) is:

$P_D= (-V_{CC})^2/R_{GND}$

This resistor can be shared amongst several different HSDs. Please note that the value of this resistor should be calculated with formula (1) where $I_{S(on)max}$ becomes the sum of the maximum on-state currents of the different devices.

Please note that if the microprocessor ground is not shared by the device ground then the R_{GND} will produce a shift ($I_{S(on)max}$ * R_{GND}) in the input thresholds and the status output values. This shift will vary depending on how many devices are ON in the case of several high side drivers sharing the same R_{GND}.

If the calculated power dissipation leads to a large resistor or several devices have to share the same resistor then ST suggests to utilize Solution 2 (see below).

Solution 2: A diode (D_{GND}) in the ground line.

A resistor (R_{GND}=1kΩ) should be inserted in parallel to D_{GND} if the device drives an inductive load.

This small signal diode can be safely shared amongst several different HSDs. Also in this case, the presence of the ground network will produce a shift (≃600mV) in the input threshold and in the status output values if the microprocessor ground is not common to the device ground. This shift will not vary if more than one HSD shares the same diode/resistor network.

LOAD DUMP PROTECTION

D_{ld} is necessary (Voltage Transient Suppressor) if the load dump peak voltage exceeds to V_{CC} max DC rating. The same applies if the device is subject to transients on the V_{CC} line that are greater than the ones shown in the ISO T/R 7637/1 table.

µC I/Os PROTECTION:

If a ground protection network is used and negative transient are present on the V_{CC} line, the control pins will be pulled negative. ST suggests to insert a resistor (R_{prot}) in line to prevent the µC I/Os pins to latch-up.

The value of these resistors is a compromise between the leakage current of µC and the current required by the HSD I/Os (Input levels compatibility) with the latch-up limit of µC I/Os.

$-V_{CCpeak}/I_{latchup} \leq R_{prot} \leq (V_{OH\mu C}-V_{IH}-V_{GND}) / I_{IHmax}$

Calculation example:

For V_{CCpeak}= - 100V and $I_{latchup} \geq$ 20mA; $V_{OH\mu C} \geq$ 4.5V

5kΩ ≤ R_{prot} ≤ 65kΩ.

Recommended R_{prot} value is 10kΩ.

Figure 9. Waveforms

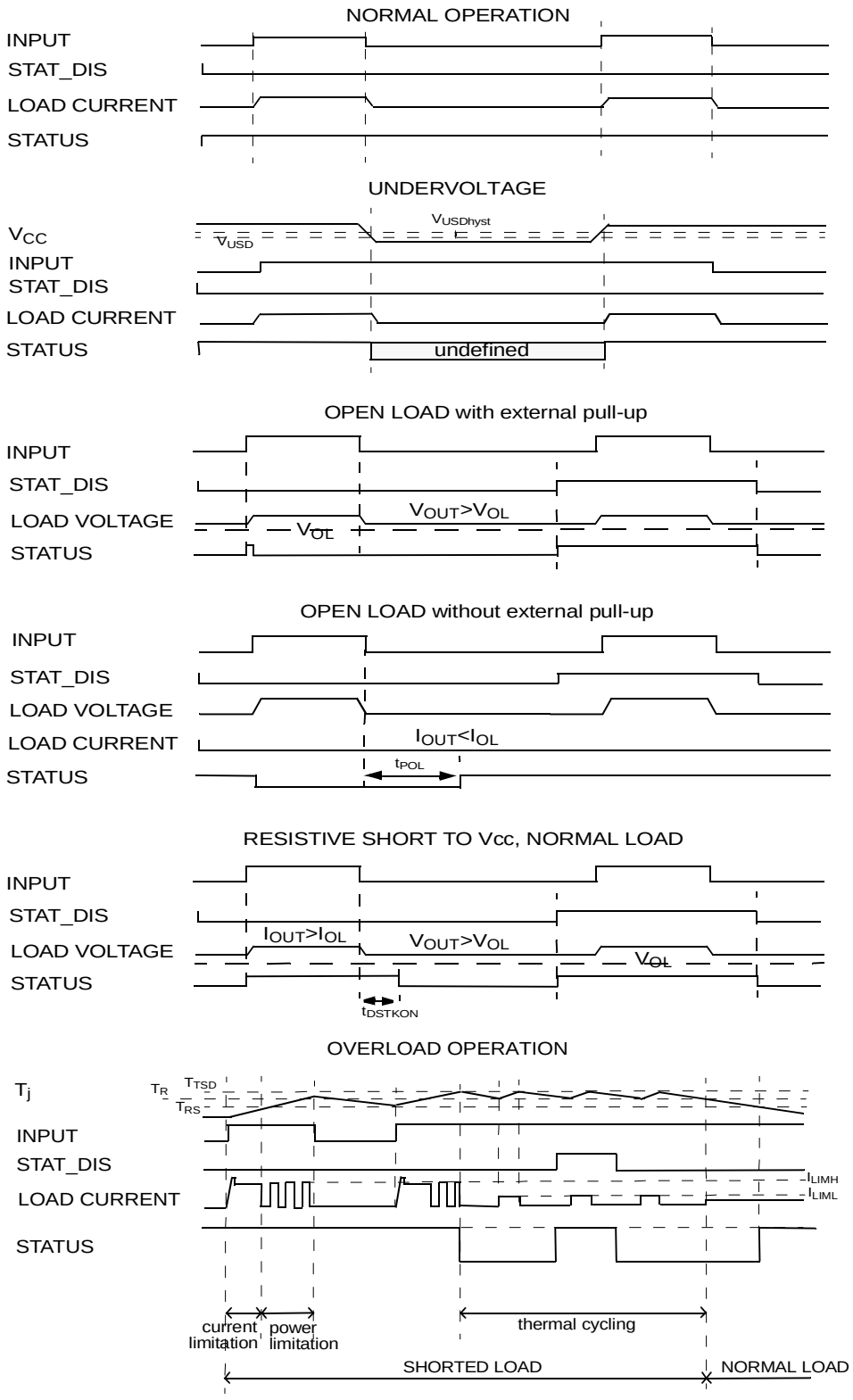

PACKAGE MECHANICAL

Table 14. PowerSSO-24™ Mechanical Data

Symbol	millimeters		
	Min	Typ	Max
A	1.9		2.22
A2	1.9		2.15
a1	0		0.07
b	0.34	0.4	0.46
c	0.23		0.32
D	10.2		10.4
E	7.4		7.6
e		0.8	
e3		8.8	
G			0.1
G1			0.06
H	10.1		10.5
h			0.4
L	0.55		0.85
N			10º
X	3.9		4.3
Y	6.1		6.5

Figure 10. PowerSSO-24™ Package Dimensions

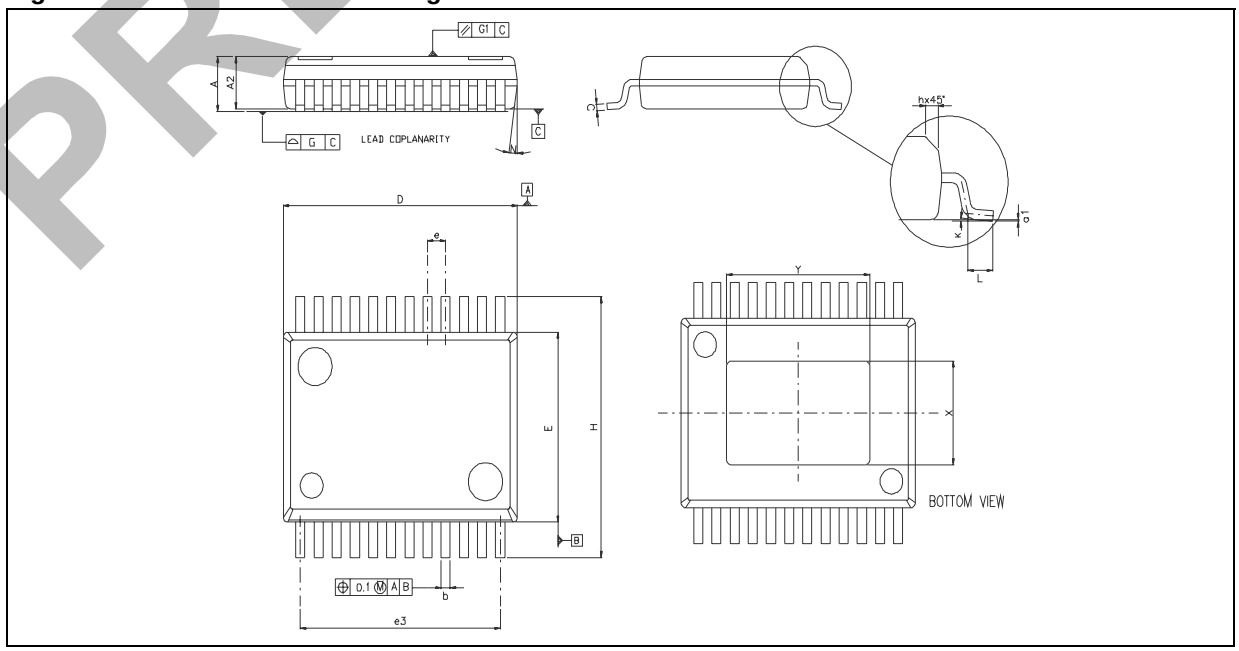

PRELIMINARY

REVISION HISTORY

Table 1. Revision History

Date	Revision	Description of Changes
Oct. 2004	1	- First issue.
Mar. 2005	2	- Minor changes

Information furnished is believed to be accurate and reliable. However, STMicroelectronics assumes no responsibility for the consequences of use of such information nor for any infringement of patents or other rights of third parties which may results from its use. No license is granted by implication or otherwise under any patent or patent rights of STMicroelectronics. Specifications mentioned in this publication are subject to change without notice. This publication supersedes and replaces all information previously supplied. STMicroelectronics products are not authorized for use as critical components in life support devices or systems without express written approval of STMicroelectronics.

The ST logo is a registered trademark of STMicroelectronics.
All other names are the property of their respective owners

© 2005 STMicroelectronics - All rights reserved

STMicroelectronics group of companies
Australia - Belgium - Brazil - Canada - China - Czech Republic - Finland - France - Germany - Hong Kong - India - Israel - Italy - Japan - Malaysia - Malta - Morocco - Singapore - Spain - Sweden - Switzerland - United Kingdom - United States of America
www.st.com