# VNQ500PEP

## QUAD CHANNEL HIGH SIDE DRIVER

**TARGET SPECIFICATION**

| TYPE | $R_{DS(on)}$ | $I_{OUT}$ | $V_{CC}$ |
|---|---|---|---|
| VNQ500PEP | 500 mΩ | 0.35 A | 36V |

- CMOS COMPATIBLE I/O's
- CHIP ENABLE
- JUNCTION OVERTEMPERATURE PROTECTION
- CURRENT LIMITATION
- SHORTED LOAD PROTECTION
- UNDERVOLTAGE SHUTDOWN
- PROTECTION AGAINST LOSS OF GROUND
- VERY LOW STAND-BY CURRENT

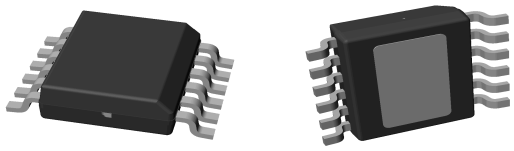

**PowerSSO-12**

| ORDER CODES | | |
|---|---|---|
| **PACKAGE** | **TUBE** | **T&R** |
| PowerSSO-12 | VNQ500PEP | VNQ500PEP13TR |

### DESCRIPTION

The VNQ500PEP is a monolithic device designed in STMicroelectronics VIPower M0-3 Technology, intended for driving any kind of load with one side connected to ground.
Active current limitation combined with latched thermal shutdown, protect the device against overload.

Device automatically turns off in case of ground pin disconnection.

### APPLICATION

- Relay Driver
- LED Driver

### ABSOLUTE MAXIMUM RATING

| Symbol | Parameter | Value | Unit |
|---|---|---|---|
| $V_{CC}$ | DC Supply voltage | 41 | V |
| $-V_{CC}$ | Reverse supply voltage | -0.3 | V |
| $-I_{GND}$ | DC Ground pin reverse current | - 250 | mA |
| $I_{OUT}$ | DC Output current | Internally Limited | A |
| $-I_{OUT}$ | Reverse DC output current | -1 | A |
| $I_{IN}$ | DC Input current | +/- 10 | mA |
| $V_{ESD}$ | Electrostatic discharge (R=1.5KΩ; C=100pF)<br>- I/On<br>- OUTn & Vcc | <br>4000<br>5000 | <br>V<br>V |
| $T_j$ | Junction operating temperature | Internally Limited | °C |
| $T_{stg}$ | Storage temperature | - 55 to 150 | °C |



This is preliminary information on a new product foreseen to be developed. Details are subject to change without notice.

## BLOCK DIAGRAM

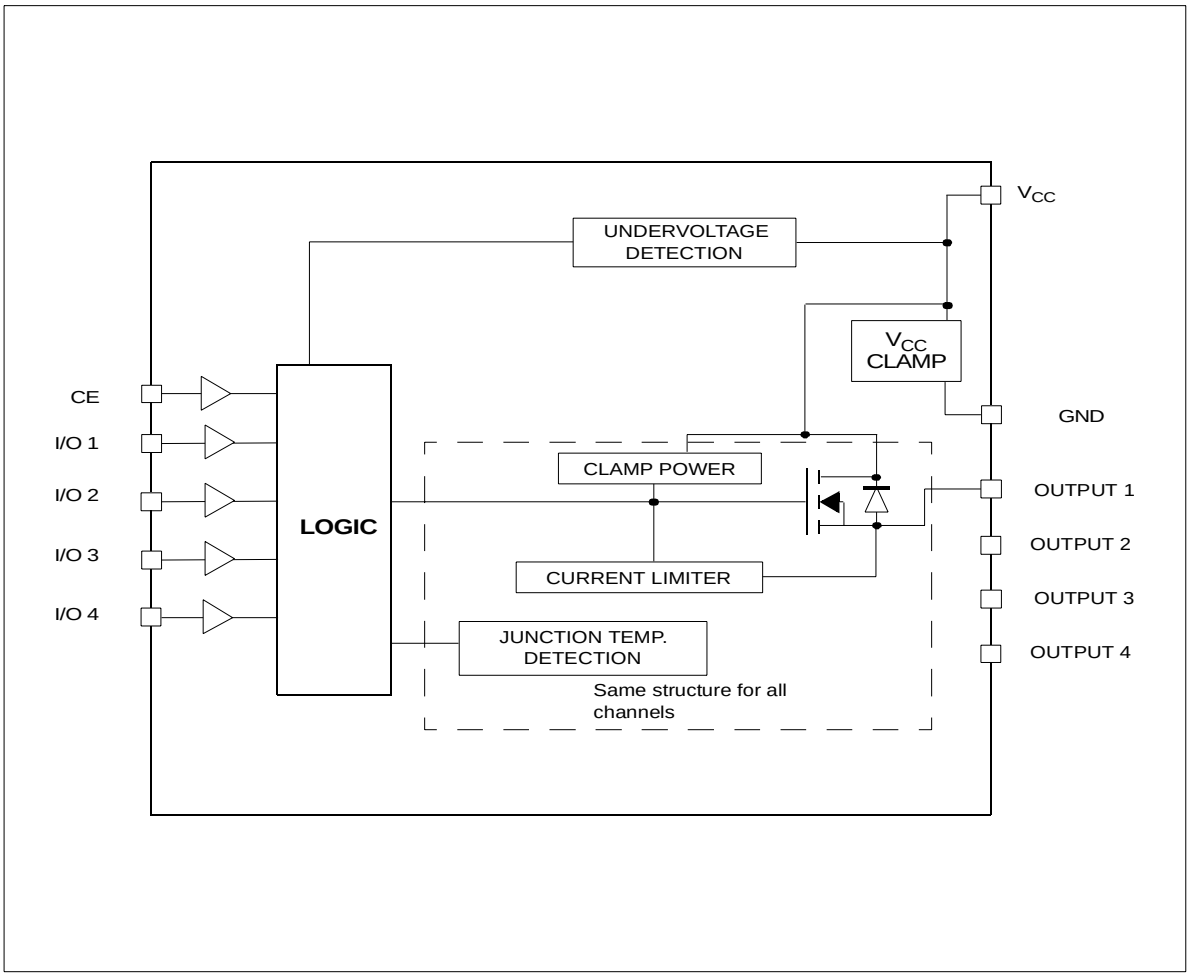


## PIN DEFINITIONS AND FUNCTIONS

| Pin No | Symbol | Function |
|---|---|---|
| TAB | $V_{CC}$ | Positive power supply voltage |
| 7,12 | $V_{CC}$ | Positive power supply voltage |
| 1 | GND | Logic ground |
| 2 | CE | Chip Enable |
| 3 | I/O 1 | Input/Output of channel 1 |
| 4 | I/O 2 | Input/Output of channel 2 |
| 5 | I/O 3 | Input/Output of channel 3 |
| 6 | I/O 4 | Input/Output of channel 4 |
| 8 | OUTPUT 4 | High-Side output of channel 4 |
| 9 | OUTPUT 3 | High-Side output of channel 3 |
| 10 | OUTPUT 2 | High-Side output of channel 2 |
| 11 | OUTPUT 1 | High-Side output of channel 1 |

## CONNECTION DIAGRAM (TOP VIEW)

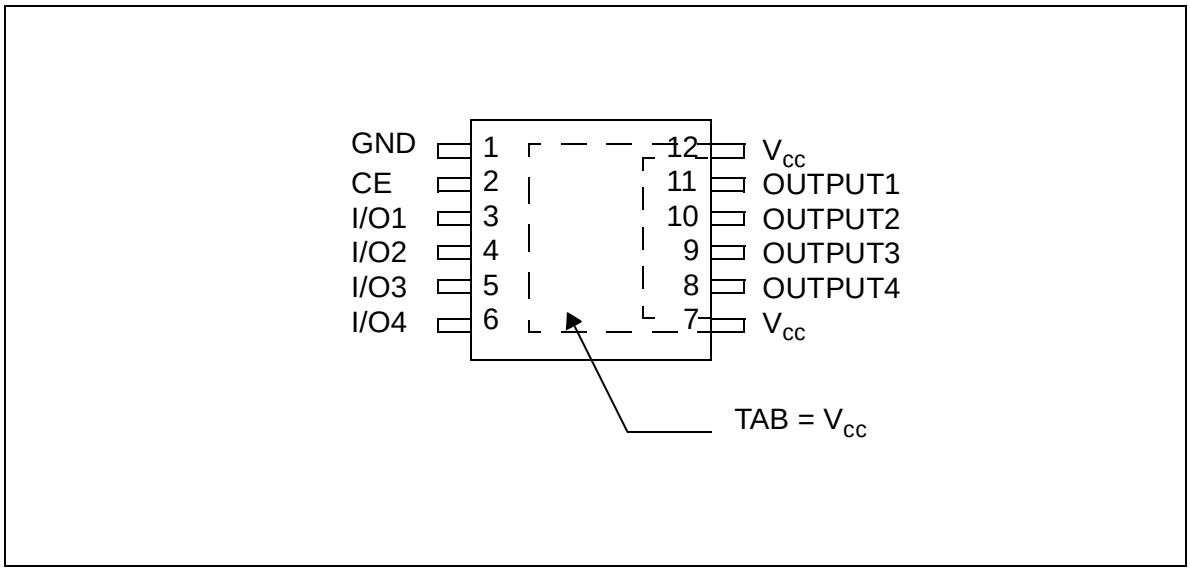


## CURRENT AND VOLTAGE CONVENTIONS

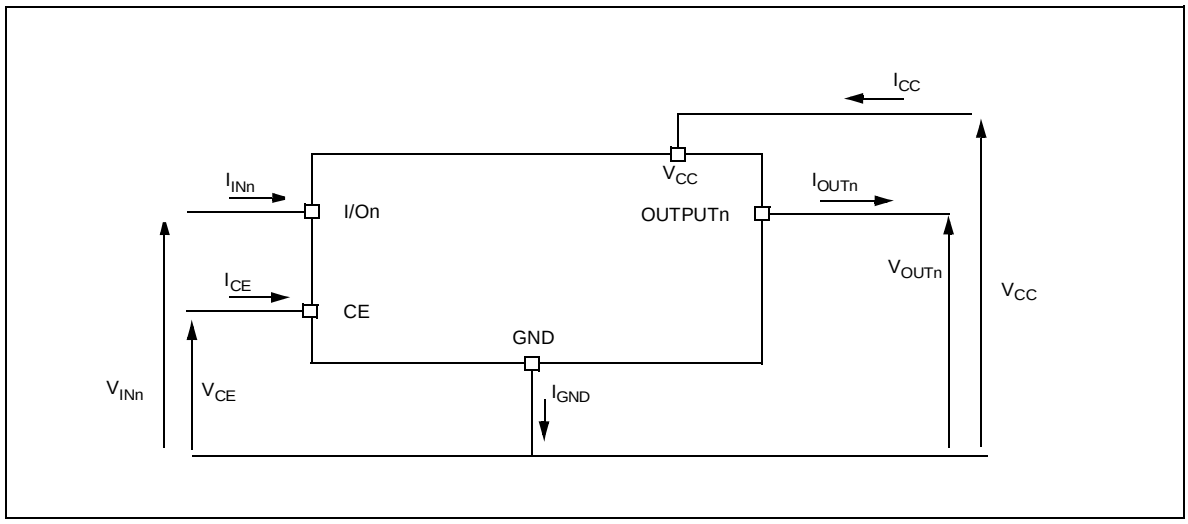

## THERMAL DATA

| Symbol | Parameter | | Value | Unit |
|---|---|---|---|---|
| $R_{thj\text{-}case}$ | Thermal resistance junction-case | Max | 4.6 | °C/W |
| $R_{thj\text{-}amb}$ | Thermal resistance junction-ambient (*) | Max | 60 | °C/W |

(*) When mounted on FR4 printed circuit board with 0.5 $cm^2$ of copper area (at least 35µ thick) connected to all TAB pins.

## ELECTRICAL CHARACTERISTICS ($8V<V_{CC}<36V$; $-40°C<T_j<150°C$, unless otherwise specified)

POWER

| Symbol | Parameter | Test Conditions | Min | Typ | Max | Unit |
|---|---|---|---|---|---|---|
| $V_{CC}$(**) | Operating supply voltage | | 5.5 | 13 | 36 | V |
| $V_{USD}$(**) | Undervoltage shut-down | | 3 | 4 | 5.5 | V |
| $V_{OV}$ (**) | Overvoltage shutdown | | 36 | | | V |
| $R_{ON}$ | On state resistance | $I_{OUTn}$=0.25A; $T_j$=25°C<br>$I_{OUTn}$=0.25A | | | 500<br>1000 | mΩ<br>mΩ |
| $I_S$ | Supply current | $V_{CE}=V_{I/On}$=0V; $V_{CC}$=13V; $T_{case}$=25°C<br>On state (all channels ON); $V_{CC}$=13V | | | 20<br>8 | µA<br>mA |
| $I_{LGND}$(**) | Output current at turn-off | $V_{CC}=V_{CE}=V_{I/On}=V_{GND}$=13V<br>$V_{OUTn}$=0V | | | 1 | mA |
| $I_{L(off)}$(**) | Off state output current | $V_{I/On}=V_{OUTn}$=0V | 0 | | 5 | µA |
| $I_{Loff2}$(**) | Off state output current | $V_{I/On}$=0V, $V_{OUTn}$=0V, $V_{CC}$=13V; $T_{case}$=25°C | | | 1 | µA |

(**) Per channel

SWITCHING ($V_{CC}$=13V)

| Symbol | Parameter | Test Conditions | Min | Typ | Max | Unit |
|---|---|---|---|---|---|---|
| $t_{on}$ | Turn-on time | $R_L$=52Ω from 80% $V_{OUT}$ (*) | | 50 | | µs |
| $t_{off}$ | Turn-off time | $R_L$=52Ω to 10% $V_{OUT}$ (*) | | 75 | | µs |
| $dV_{OUT}/dt_{(on)}$ | Turn-on voltage slope | $R_L$=52Ω from $V_{OUT}$=1.3V to $V_{OUT}$=10.4V (*) | | 0.3 | | V/µs |
| $dV_{OUT}/dt_{(off)}$ | Turn-off voltage slope | $R_L$=52Ω from $V_{OUT}$=11.7V to $V_{OUT}$=1.3V (*) | | 0.3 | | V/µs |

(*) see fig.1a :switching time waveforms

INPUT & CE PINS

| Symbol | Parameter | Test Conditions | Min | Typ | Max | Unit |
|---|---|---|---|---|---|---|
| $V_{INL}$ | I/O low level | | | | 1.25 | V |
| $I_{INL}$ | Low level I/O current | $V_{IN}$=1.25V | 1 | | | µA |
| $V_{INH}$ | I/O high level | | 3.25 | | | V |
| $I_{INH}$ | High level I/O current | $V_{IN}$=3.25V | | | 10 | µA |
| $V_{I(hyst)}$ | I/O hysteresis voltage | | 0.5 | | | V |
| $V_{ICL}$ | I/O clamp voltage | $I_{IN}$=1mA<br>$I_{IN}$=-1mA | 6 | 6.8<br>-0.7 | 8 | V<br>V |
| $V_{OL}$ | I/O low level default detection | $I_{IN}$=1mA, latched thermal shutdown | | | 0.5 | V |

## ELECTRICAL CHARACTERISTICS (continued)

PROTECTIONS

| Symbol | Parameter | Test Conditions | Min | Typ | Max | Unit |
|---|---|---|---|---|---|---|
| $T_{TSD}$ | Junction shut-down temperature | | 150 | 175 | 200 | °C |
| $I_{lim}$ | DC Short circuit current | $V_{CC}$=13V; $R_{LOAD}$=10mΩ | 0.35 | | 0.7 | A |
| $V_{demag}$ | Turn-off output clamp voltage | $I_{OUT}$=0.25 A; L=20mH | $V_{CC}$-41 | $V_{CC}$-48 | $V_{CC}$-55 | V |
| $t_{reset}$ | Thermal latch reset time | Tj < $T_{TSD}$ (see figure 3 in waveforms) | | | 10 | µs |

### Switching Time Waveforms

**Fig. 1a :** Turn-on & Turn-off

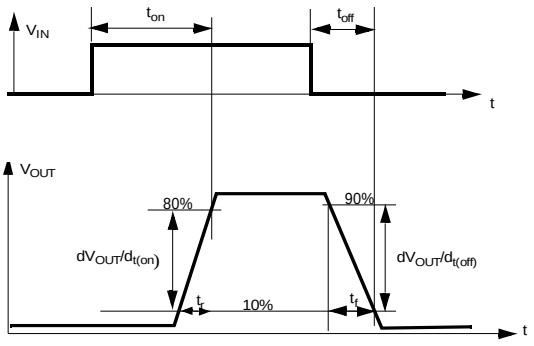


### Driving circuit

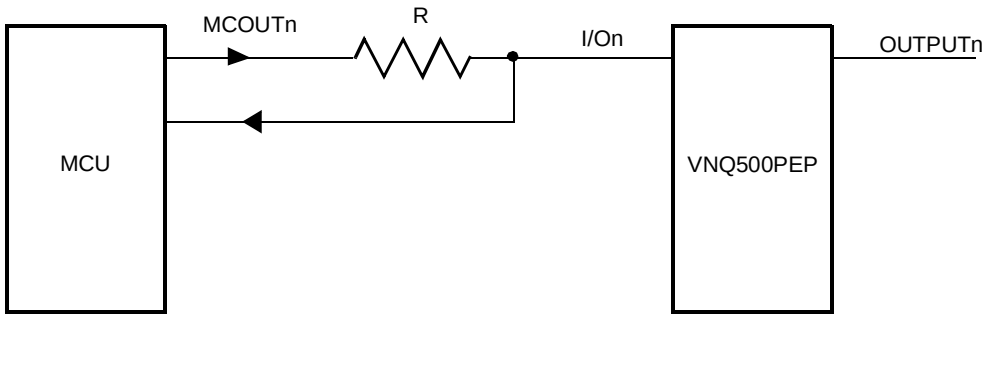

## TRUTH TABLE

| CONDITIONS | MCOUTn | CE | I/On | OUTPUTn |
|---|---|---|---|---|
| Normal operation | L<br>H | H<br>H | L<br>H | L<br>H |
| Current limitation | L<br>H | H<br>H | L<br>H | L<br>H |
| Overtemperature | L<br>H | H<br>H | L<br>L (latched) | L<br>L |
| Undervoltage | L<br>H | H<br>H | L<br>H | L<br>L |
| Stand-by | X | L | X | L |

## ELECTRICAL TRANSIENT REQUIREMENTS

| ISO T/R 7637/1 Test Pulse | TEST LEVELS | | | | |
|---|---|---|---|---|---|
| | I | II | III | IV | Delays and Impedance |
| 1 | -25 V | -50 V | -75 V | -100 V | 2 ms 10 Ω |
| 2 | +25 V | +50 V | +75 V | +100 V | 0.2 ms 10 Ω |
| 3a | -25 V | -50 V | -100 V | -150 V | 0.1 µs 50 Ω |
| 3b | +25 V | +50 V | +75 V | +100 V | 0.1 µs 50 Ω |
| 4 | -4 V | -5 V | -6 V | -7 V | 100 ms, 0.01 Ω |
| 5 | +26.5 V | +46.5 V | +66.5 V | +86.5 V | 400 ms, 2 Ω |

| ISO T/R 7637/1 Test Pulse | TEST LEVELS RESULTS | | | |
|---|---|---|---|---|
| | I | II | III | IV |
| 1 | C | C | C | C |
| 2 | C | C | C | C |
| 3a | C | C | C | C |
| 3b | C | C | C | C |
| 4 | C | C | C | C |
| 5 | C | E | E | E |

| CLASS | CONTENTS |
|---|---|
| C | All functions of the device are performed as designed after exposure to disturbance. |
| E | One or more functions of the device is not performed as designed after exposure to disturbance and cannot be returned to proper operation without replacing the device. |

## APPLICATION SCHEMATIC

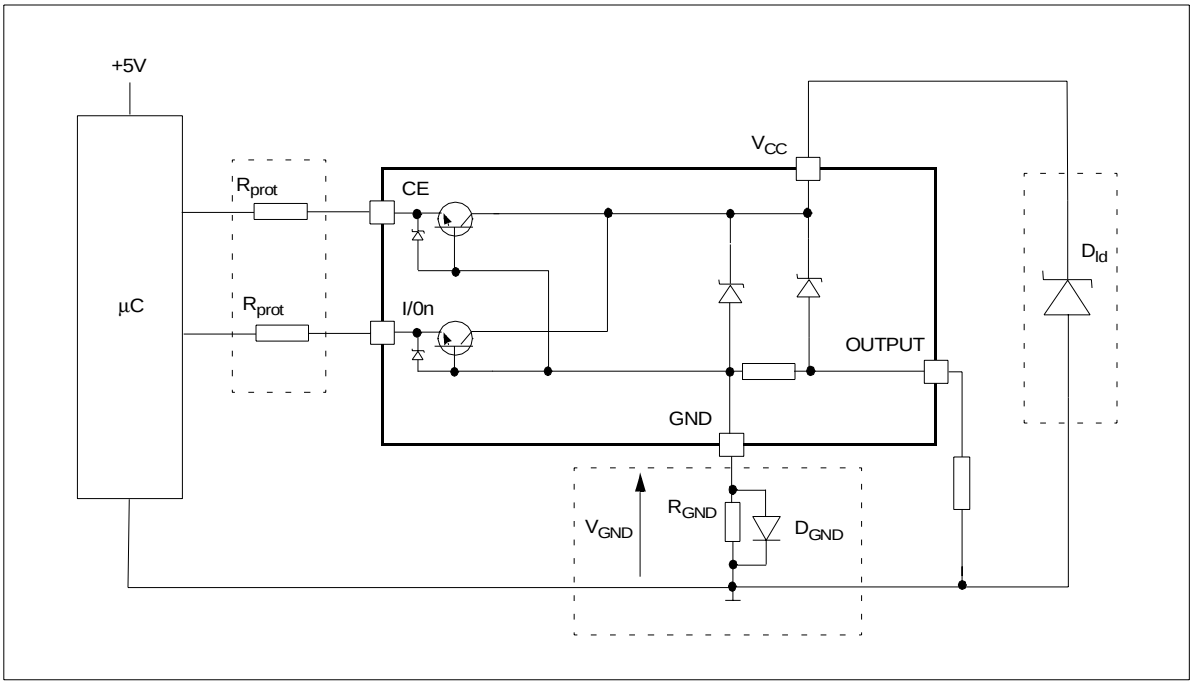


## GND PROTECTION NETWORK AGAINST REVERSE BATTERY

Solution 1: Resistor in the ground line ($R_{GND}$ only). This can be used with any type of load.

The following is an indication on how to dimension the $R_{GND}$ resistor.

1) $R_{GND} \leq 600mV / (I_{S(on)max})$.

2) $R_{GND} \geq (-V_{CC}) / (-I_{GND})$

where $-I_{GND}$ is the DC reverse ground pin current and can be found in the absolute maximum rating section of the of the device's datasheet.

Power Dissipation in $R_{GND}$ (when $V_{CC}$<0: during reverse battery situations) is:

$P_D= (-V_{CC})^2/R_{GND}$

This resistor can be shared amongst several different HSD. Please note that the value of this resistor should be calculated with formula (1) where $I_{S(on)max}$ becomes the sum of the maximum on-state currents of the different devices.

Please note that if the microprocessor ground is not common with the device ground then the $R_{GND}$ will produce a shift ($I_{S(on)max} * R_{GND}$) in the input thresholds and the status output values. This shift will vary depending on many devices are ON in the case of several high side drivers sharing the same $R_{GND}$.

If the calculated power dissipation leads to a large resistor or several devices have to share the same resistor then the ST suggest to utilize Solution 2 (see below).

Solution 2: A diode ($D_{GND}$) in the ground line.

A resistor ($R_{GND}$=1kΩ) should be inserted in parallel to $D_{GND}$ if the device will be driving an inductive load.

This small signal diode can be safely shared amongst several different HSD. Also in this case, the presence of the ground network will produce a shift (≃600mV) in the input threshold and the status output values if the microprocessor ground is not common with the device ground. This shift will not vary if more than one HSD shares the same diode/resistor network.

## LOAD DUMP PROTECTION

$D_{ld}$ is necessary (Voltage Transient Suppressor) if the load dump peak voltage exceeds $V_{CC}$ max DC rating. The same applies if the device will be subject to transients on the $V_{CC}$ line that are greater than the ones shown in the ISO T/R 7637/1 table.

## µC I/Os PROTECTION:

If a ground protection network is used and negative transient are present on the $V_{CC}$ line, the control pins will be pulled negative. ST suggests to insert a resistor ($R_{prot}$) in line to prevent the µC I/Os pins to latch-up.

The value of these resistors is a compromise between the leakage current of µC and the current required by the HSD I/Os (Input levels compatibility) with the latch-up limit of µC I/Os.

$-V_{CCpeak}/I_{latchup} \leq R_{prot} \leq (V_{OH\mu C}-V_{IH}-V_{GND}) / I_{IHmax}$

Calculation example:

For $V_{CCpeak}$= - 100V and $I_{latchup} \geq$ 20mA; $V_{OH\mu C} \geq$ 4.5V

5kΩ ≤ $R_{prot}$ ≤ 65kΩ.

Recommended $R_{prot}$ value is 10kΩ.

**Waveforms**

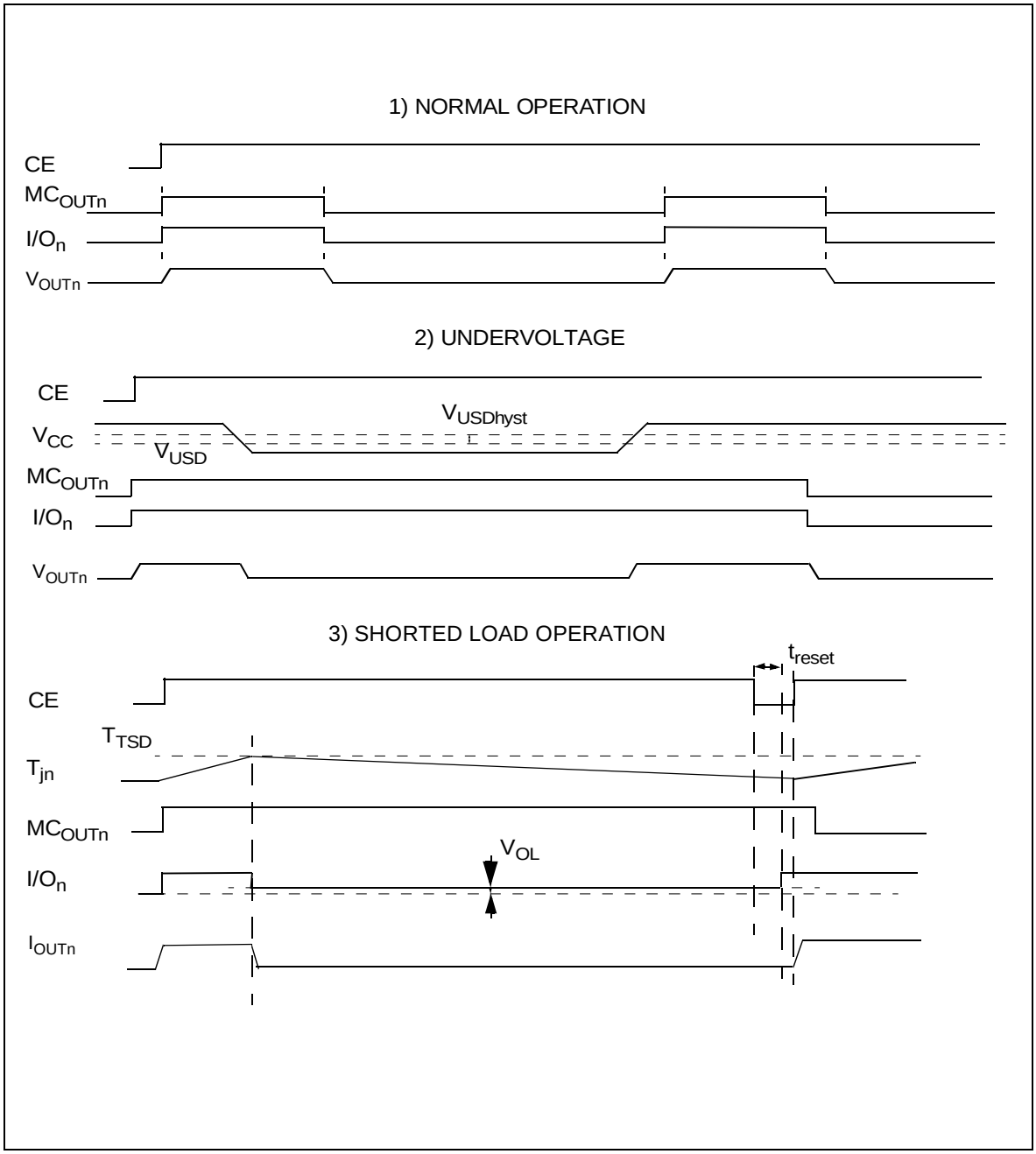
1) NORMAL OPERATION
CE
MC_OUTn
I/O_n
V_OUTn
2) UNDERVOLTAGE
CE
V_USDhyst
V_CC
V_USD
MC_OUTn
I/O_n
V_OUTn
3) SHORTED LOAD OPERATION
t_reset
CE
T_TSD
T_jn
MC_OUTn
V_OL
I/O_n
I_OUTn

# PowerSSO-12™ MECHANICAL DATA

| DIM. | mm. | | |
|---|---|---|---|
| | MIN. | TYP | MAX. |
| A | 1.250 | | 1.620 |
| A1 | 0.000 | | 0.100 |
| A2 | 1.100 | | 1.650 |
| B | 0.230 | | 0.410 |
| C | 0.190 | | 0.250 |
| D | 4.800 | | 5.000 |
| E | 3.800 | | 4.000 |
| e | | 0.800 | |
| H | 5.800 | | 6.200 |
| h | 0.250 | | 0.500 |
| L | 0.400 | | 1.270 |
| k | 0º | | 8º |
| X | 1.900 | | 2.500 |
| Y | 3.600 | | 4.200 |
| ddd | | | 0.100 |

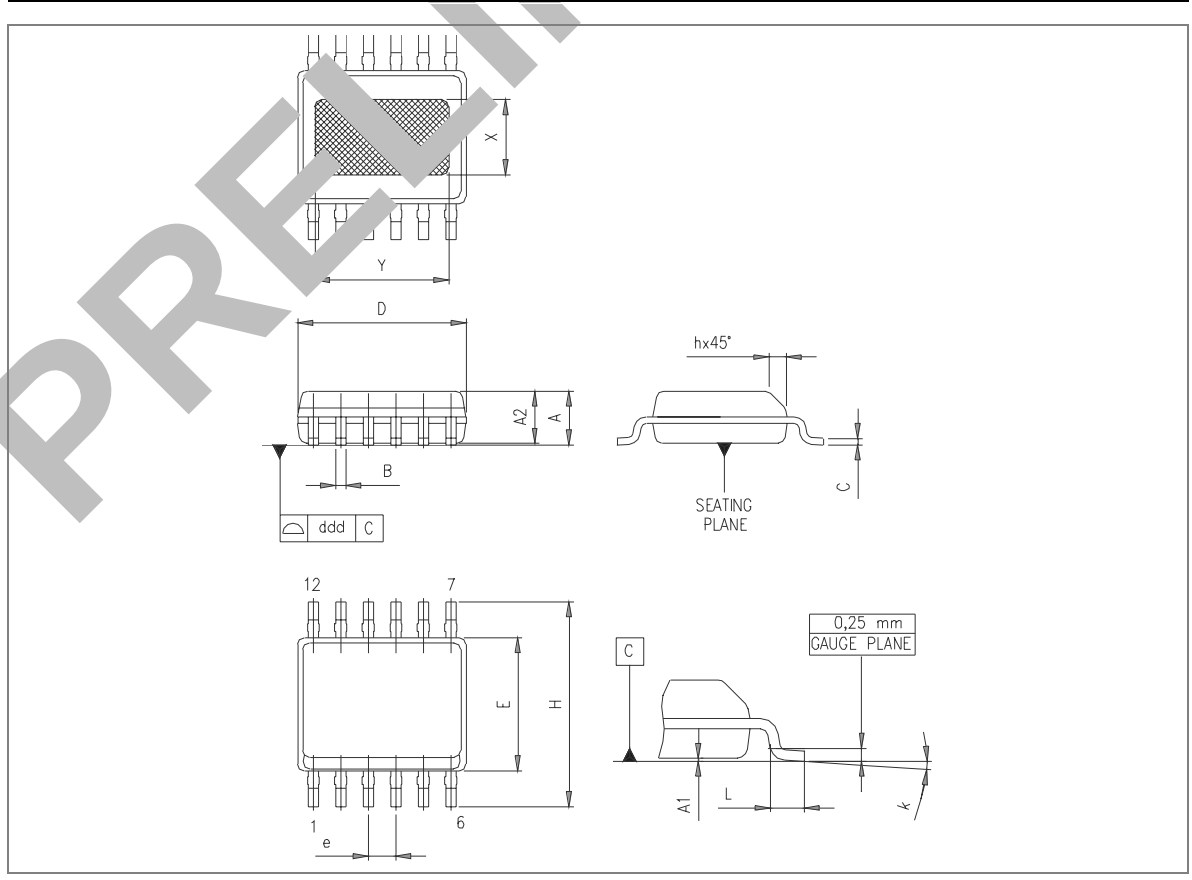


PRELIMINARY

Information furnished is believed to be accurate and reliable. However, STMicroelectronics assumes no responsibility for the consequences of use of such information nor for any infringement of patents or other rights of third parties which may results from its use. No license is granted by implication or otherwise under any patent or patent rights of STMicroelectronics. Specifications mentioned in this publication are subject to change without notice. This publication supersedes and replaces all information previously supplied. STMicroelectronics products are not authorized for use as critical components in life support devices or systems without express written approval of STMicroelectronics.
The ST logo is a trademark of STMicroelectronics

© 2003 STMicroelectronics - Printed in ITALY- All Rights Reserved.

STMicroelectronics GROUP OF COMPANIES
Australia - Brazil - Canada - China - Finland - France - Germany - Hong Kong - India - Israel - Italy - Japan - Malaysia - Malta - Morocco - Singapore - Spain - Sweden - Switzerland - United Kingdom - U.S.A.

**http://www.st.com**