VNP10N07

"OMNIFET": FULLY AUTOPROTECTED POWER MOSFET

TYPE	V_{clamp}	$R_{DS(on)}$	I_{lim}
VNP10N07	70 V	0.1 Ω	10 A

- LINEAR CURRENT LIMITATION
- THERMAL SHUT DOWN
- SHORT CIRCUIT PROTECTION
- INTEGRATED CLAMP
- LOW CURRENT DRAWN FROM INPUT PIN
- DIAGNOSTIC FEEDBACK THROUGH INPUT PIN
- ESD PROTECTION
- DIRECT ACCESS TO THE GATE OF THE POWER MOSFET (ANALOG DRIVING)
- COMPATIBLE WITH STANDARD POWER MOSFET
- STANDARD TO-220 PACKAGE

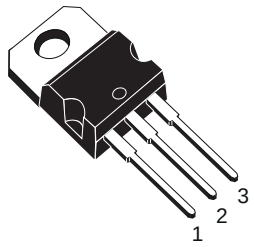

TO-220

DESCRIPTION

The VNP10N07 is a monolithic device made using STMicroelectronics VIPower Technology, intended for replacement of standard power MOSFETS in DC to 50 KHz applications.
Built-in thermal shut-down, linear current limitation and overvoltage clamp protect the chip in harsh enviroments.

Fault feedback can be detected by monitoring the voltage at the input pin.

BLOCK DIAGRAM

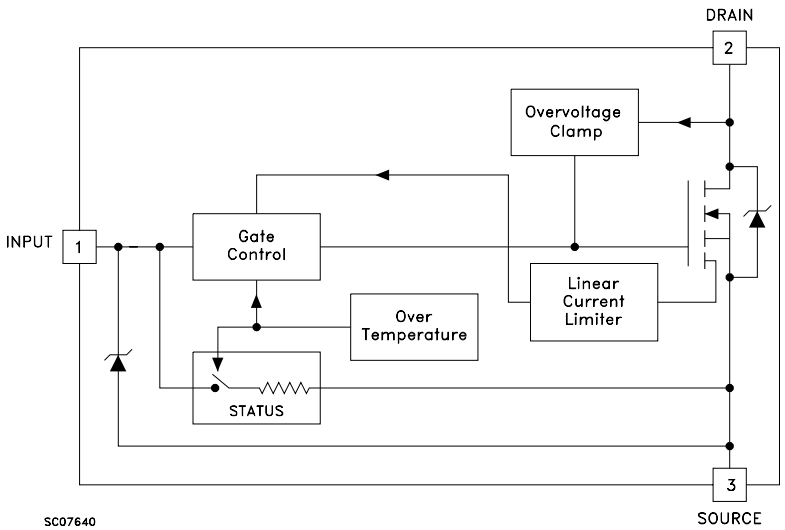

ABSOLUTE MAXIMUM RATING

Symbol	Parameter	Value	Unit
V_{DS}	Drain-source Voltage (V_{in} = 0)	Internally Clamped	V
V_{in}	Input Voltage	18	V
I_D	Drain Current	Internally Limited	A
I_R	Reverse DC Output Current	-14	A
V_{esd}	Electrostatic Discharge (C= 100 pF, R=1.5 KΩ)	2000	V
P_{tot}	Total Dissipation at T_c = 25 ^oC	50	W
T_j	Operating Junction Temperature	Internally Limited	^oC
T_c	Case Operating Temperature	Internally Limited	^oC
T_{stg}	Storage Temperature	-55 to 150	^oC

THERMAL DATA

$R_{thj-case}$	Thermal Resistance Junction-case	Max	2.5	$^oC/W$
$R_{thj-amb}$	Thermal Resistance Junction-ambient	Max	62.5	$^oC/W$

ELECTRICAL CHARACTERISTICS (T_{case} = 25 ^oC unless otherwise specified)

OFF

Symbol	Parameter	Test Conditions	Min.	Typ.	Max.	Unit
V_{CLAMP}	Drain-source Clamp Voltage	I_D = 200 mA V_{in} = 0	60	70	80	V
V_{CLTH}	Drain-source Clamp Threshold Voltage	I_D = 2 mA V_{in} = 0	55			V
V_{INCL}	Input-Source Reverse Clamp Voltage	I_{in} = -1 mA	-1		-0.3	V
I_{DSS}	Zero Input Voltage Drain Current (V_{in} = 0)	V_{DS} = 13 V V_{in} = 0 V_{DS} = 25 V V_{in} = 0			50 200	µA µA
I_{ISS}	Supply Current from Input Pin	V_{DS} = 0 V V_{in} = 10 V		250	500	µA

ON (∗)

Symbol	Parameter	Test Conditions	Min.	Typ.	Max.	Unit
$V_{IN(th)}$	Input Threshold Voltage	V_{DS} = V_{in} I_D + I_{in} = 1 mA	0.8		3	V
$R_{DS(on)}$	Static Drain-source On Resistance	V_{in} = 10 V I_D = 5 A V_{in} = 5 V I_D = 5 A			0.1 0.14	Ω Ω

DYNAMIC

Symbol	Parameter	Test Conditions	Min.	Typ.	Max.	Unit
g_{fs} (∗)	Forward Transconductance	V_{DS} = 13 V I_D = 5 A	6	8		S
C_{oss}	Output Capacitance	V_{DS} = 13 V f = 1 MHz V_{in} = 0		350	500	pF

ELECTRICAL CHARACTERISTICS (continued)

SWITCHING (**)

Symbol	Parameter	Test Conditions	Min.	Typ.	Max.	Unit
$t_{d(on)}$ t_r $t_{d(off)}$ t_f	Turn-on Delay Time Rise Time Turn-off Delay Time Fall Time	V_{DD} = 15 V I_d = 5 A V_{gen} = 10 V R_{gen} = 10 Ω (see figure 3)		50 80 230 100	100 160 400 180	ns ns ns ns
$t_{d(on)}$ t_r $t_{d(off)}$ t_f	Turn-on Delay Time Rise Time Turn-off Delay Time Fall Time	V_{DD} = 15 V I_d = 5 A V_{gen} = 10 V R_{gen} = 1000 Ω (see figure 3)		600 0.9 3.8 1.7	900 2 6 2.5	ns µs µs µs
$(di/dt)_{on}$	Turn-on Current Slope	V_{DD} = 15 V I_D = 5 A V_{in} = 10 V R_{gen} = 10 Ω		60		A/µs
Q_i	Total Input Charge	V_{DD} = 12 V I_D = 5 A V_{in} = 10 V		30		nC

SOURCE DRAIN DIODE

Symbol	Parameter	Test Conditions	Min.	Typ.	Max.	Unit
V_{SD} (*)	Forward On Voltage	I_{SD} = 5 A V_{in} = 0			1.6	V
t_{rr} (**) Q_{rr} (**) I_{RRM} (**)	Reverse Recovery Time Reverse Recovery Charge Reverse Recovery Current	I_{SD} = 5 A di/dt = 100 A/µs V_{DD} = 30 V T_j = 25 °C (see test circuit, figure 5)		125 0.3 4.8		ns µC A

PROTECTION

Symbol	Parameter	Test Conditions	Min.	Typ.	Max.	Unit
I_{lim}	Drain Current Limit	V_{in} = 10 V V_{DS} = 13 V V_{in} = 5 V V_{DS} = 13 V	7 7	10 10	14 14	A A
t_{dlim} (**)	Step Response Current Limit	V_{in} = 10 V V_{in} = 5 V		20 50	30 80	µs µs
T_{jsh} (**)	Overtemperature Shutdown		150			°C
T_{jrs} (**)	Overtemperature Reset		135			°C
I_{gf} (**)	Fault Sink Current	V_{in} = 10 V V_{DS} = 13 V V_{in} = 5 V V_{DS} = 13 V		50 20		mA mA
E_{as} (**)	Single Pulse Avalanche Energy	starting T_j = 25 °C V_{DD} = 20 V V_{in} = 10 V R_{gen} = 1 KΩ L = 10 mH	0.4			J

(*) Pulsed: Pulse duration = 300 µs, duty cycle 1.5 %
(**) Parameters guaranteed by design/characterization

PROTECTION FEATURES

During normal operation, the Input pin is electrically connected to the gate of the internal power MOSFET. The device then behaves like a standard power MOSFET and can be used as a switch from DC to 50 KHz. The only difference from the user's standpoint is that a small DC current (I_{iss}) flows into the Input pin in order to supply the internal circuitry.

The device integrates:

- OVERVOLTAGE CLAMP PROTECTION: internally set at 70V, along with the rugged avalanche characteristics of the Power MOSFET stage give this device unrivalled ruggedness and energy handling capability. This feature is mainly important when driving inductive loads.
- LINEAR CURRENT LIMITER CIRCUIT: limits the drain current Id to Ilim whatever the Input pin voltage. When the current limiter is active, the device operates in the linear region, so power dissipation may exceed the capability of the heatsink. Both case and junction temperatures increase, and if this phase lasts long enough, junction temperature may reach the overtemperature threshold T_{jsh}.
- OVERTEMPERATURE AND SHORT CIRCUIT PROTECTION: these are based on sensing the chip temperature and are not dependent on the input voltage. The location of the sensing element on the chip in the power stage area ensures fast, accurate detection of the junction temperature. Overtemperature cutout occurs at minimum $150^{o}C$. The device is automatically restarted when the chip temperature falls below $135^{o}C$.
- STATUS FEEDBACK: In the case of an overtemperature fault condition, a Status Feedback is provided through the Input pin. The internal protection circuit disconnects the input from the gate and connects it instead to ground via an equivalent resistance of 100 Ω. The failure can be detected by monitoring the voltage at the Input pin, which will be close to ground potential.

Additional features of this device are ESD protection according to the Human Body model and the ability to be driven from a TTL Logic circuit (with a small increase in $R_{DS(on)}$).

Thermal Impedance

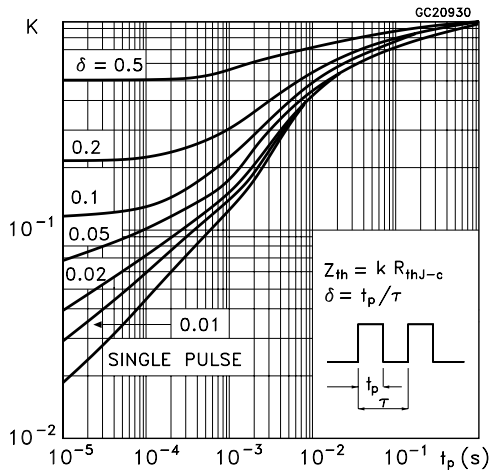

Derating Curve

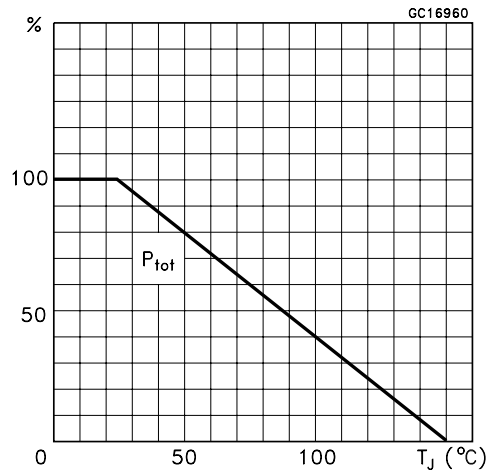

Output Characteristics

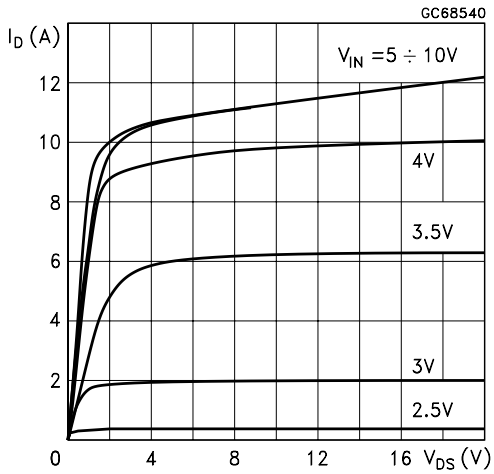

Transconductance

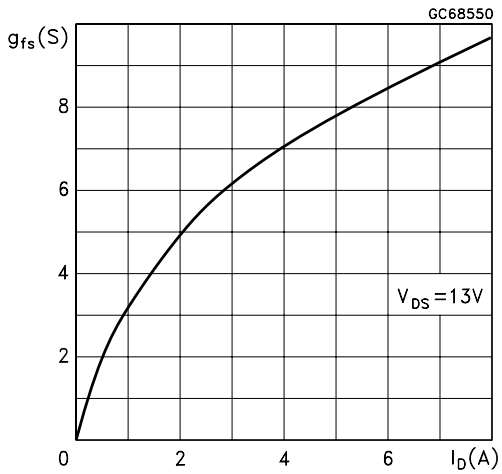

Static Drain-Source On Resistance vs Input Voltage

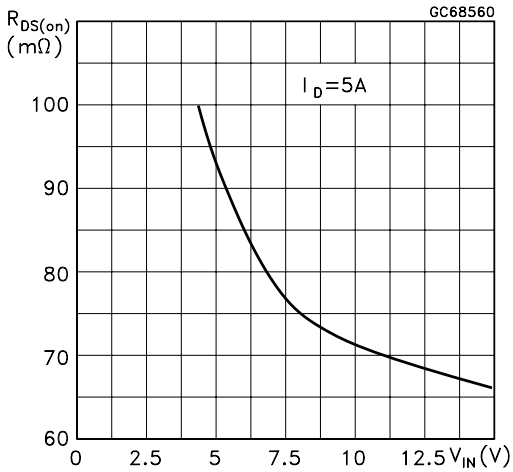

Static Drain-Source On Resistance

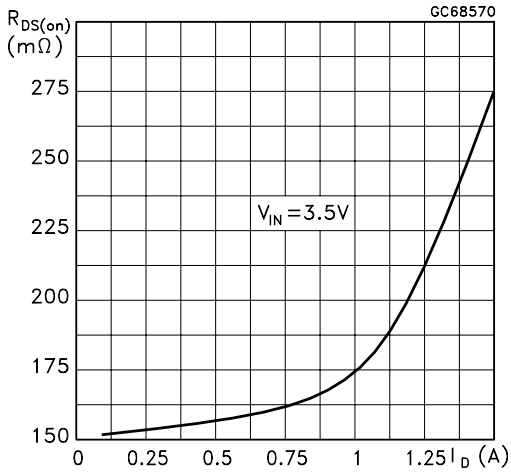

Static Drain-Source On Resistance

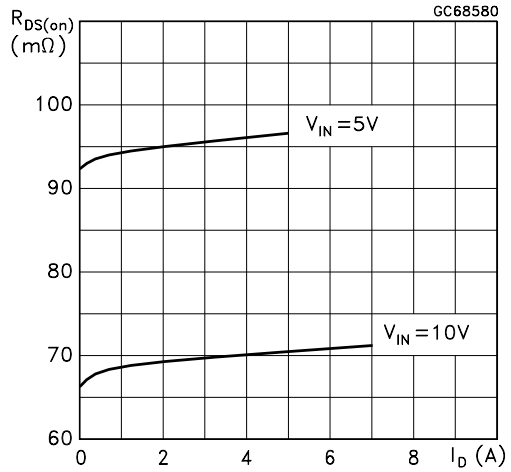

Input Charge vs Input Voltage

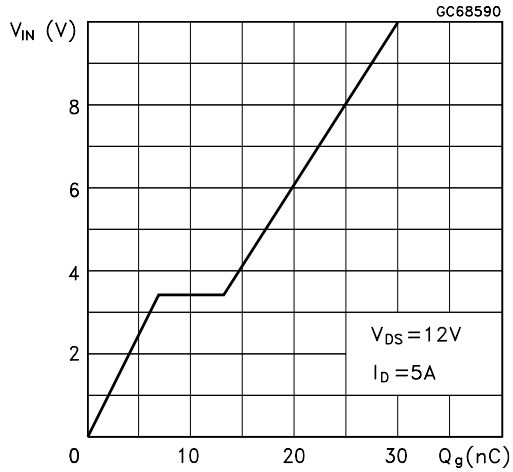

Capacitance Variations

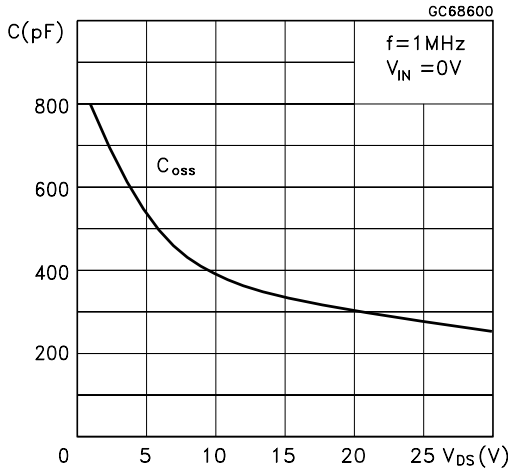

Normalized Input Threshold Voltage vs Temperature

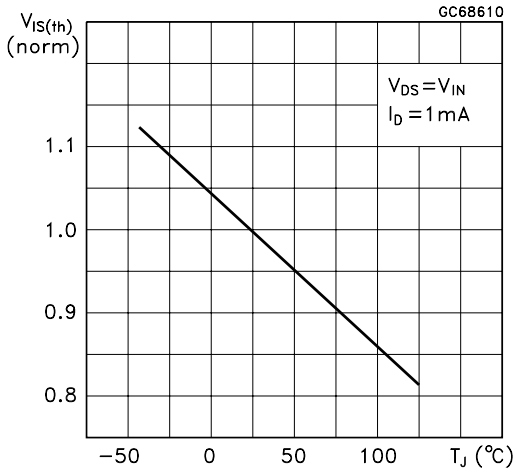

Normalized On Resistance vs Temperature

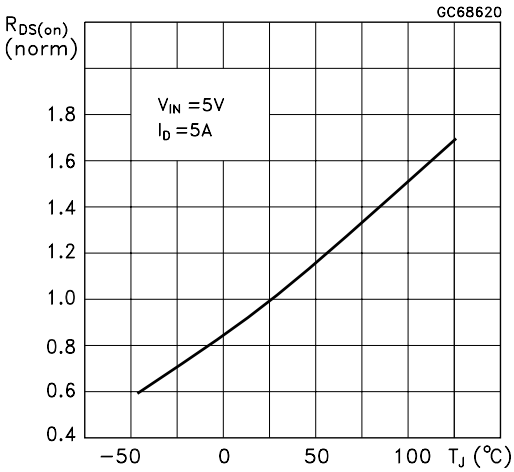

Normalized On Resistance vs Temperature

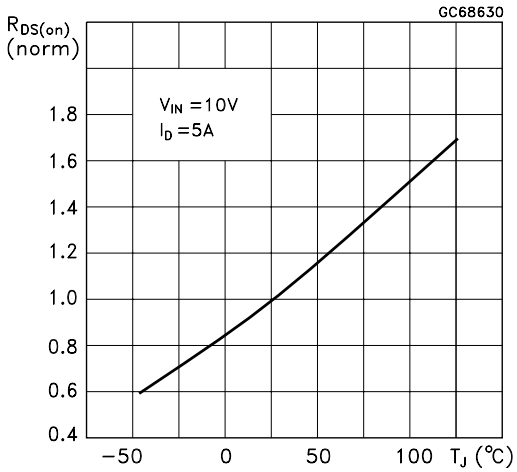

Turn-on Current Slope

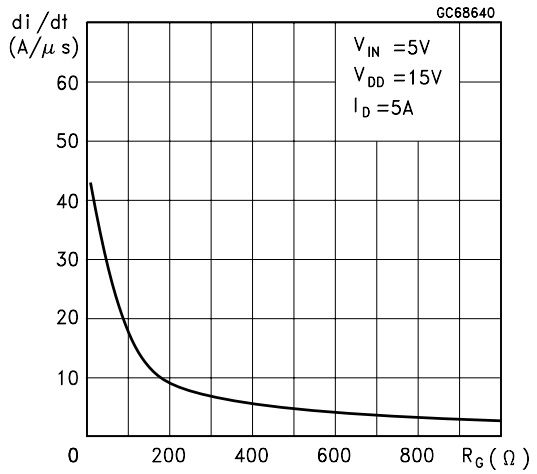

Turn-on Current Slope

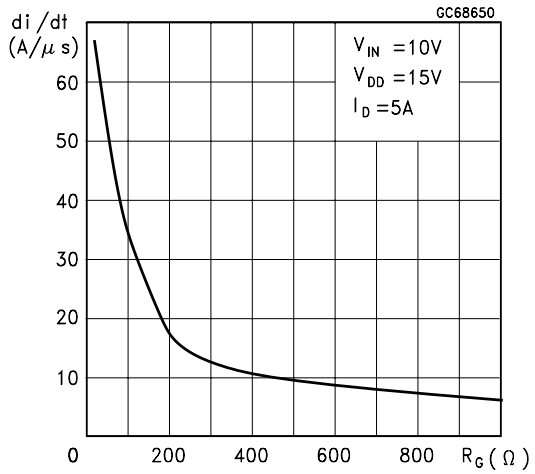

Turn-off Drain-Source Voltage Slope

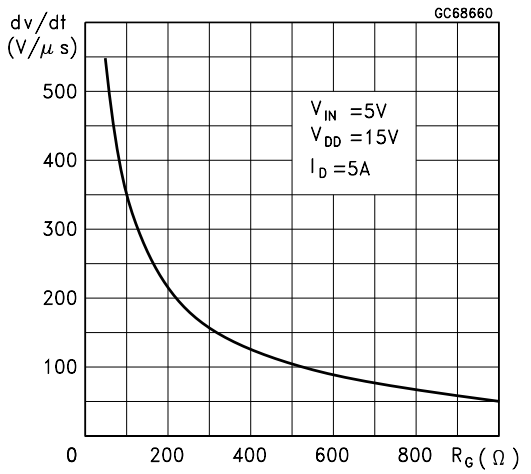

Turn-off Drain-Source Voltage Slope

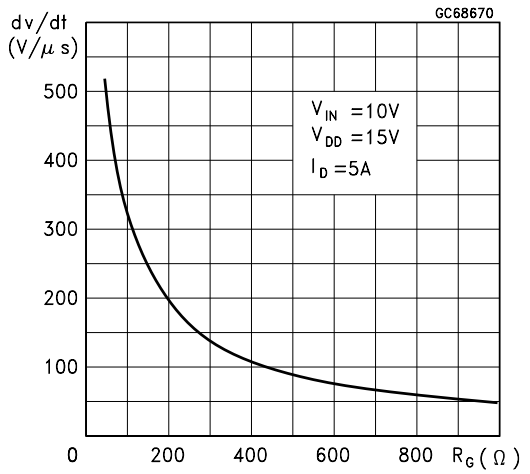

Switching Time Resistive Load

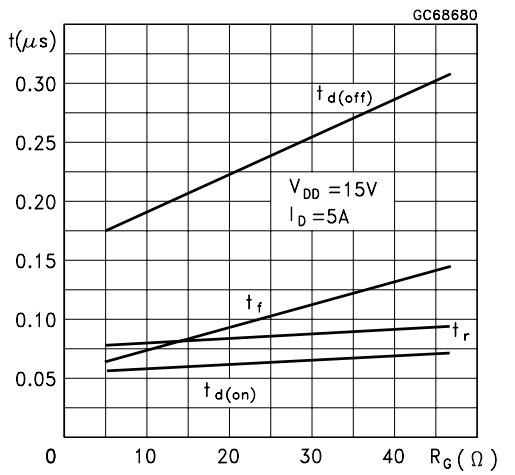

Switching Time Resistive Load

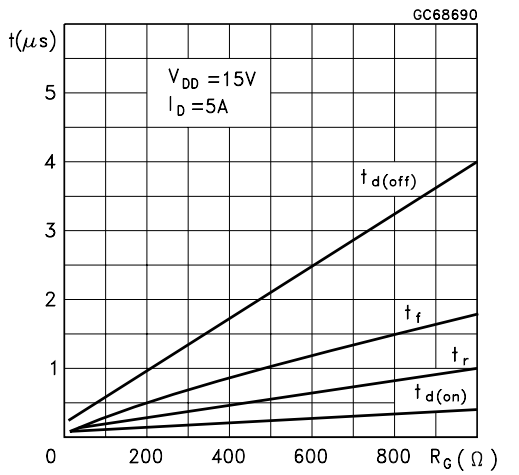

Switching Time Resistive Load

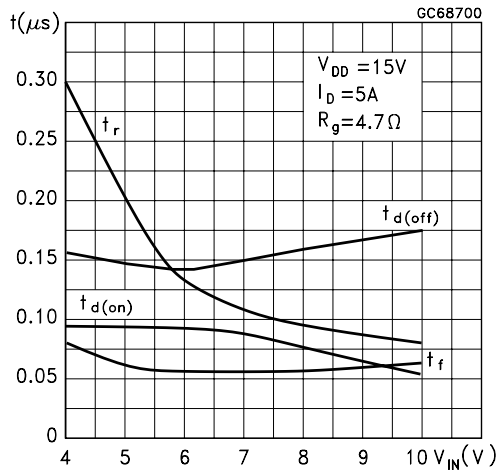

Current Limit vs Junction Temperature

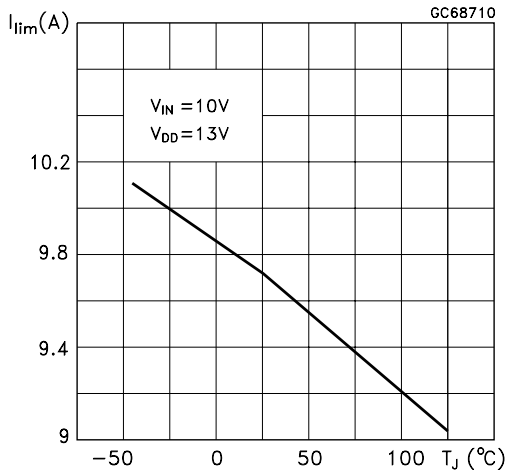

Step Response Current Limit

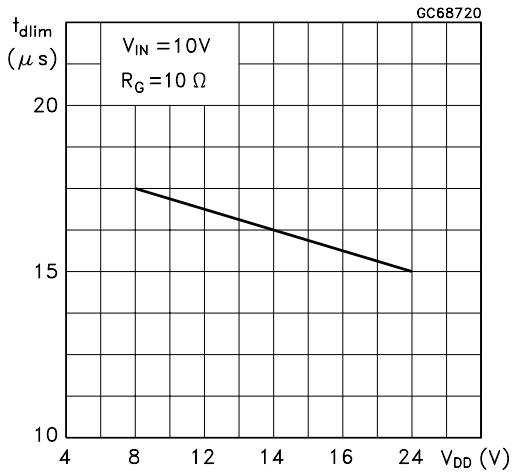

Source Drain Diode Forward Characteristics

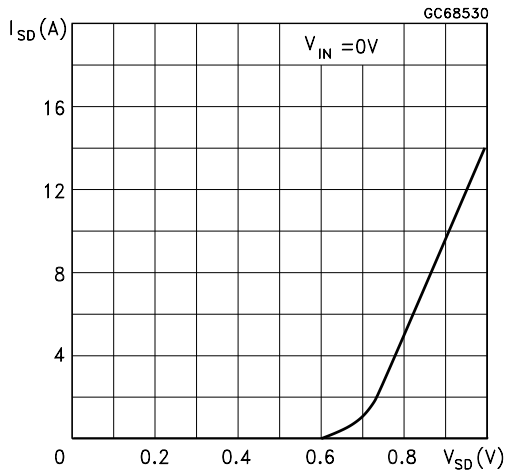

Fig. 1: Unclamped Inductive Load Test Circuits

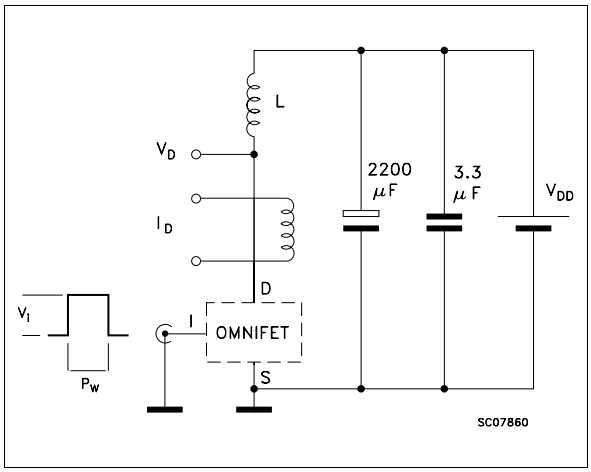

Fig. 2: Unclamped Inductive Waveforms

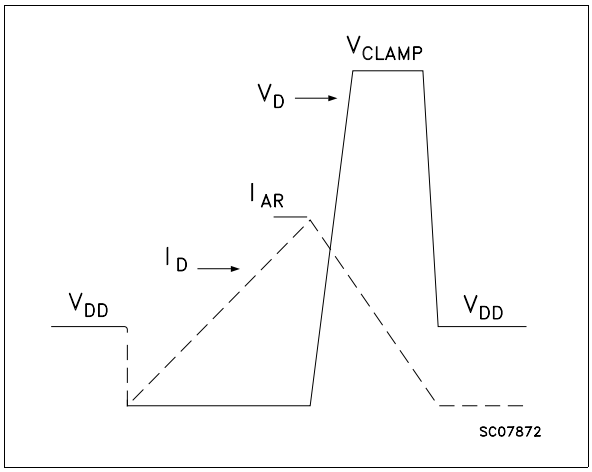

Fig. 3: Switching Times Test Circuits For Resistive Load

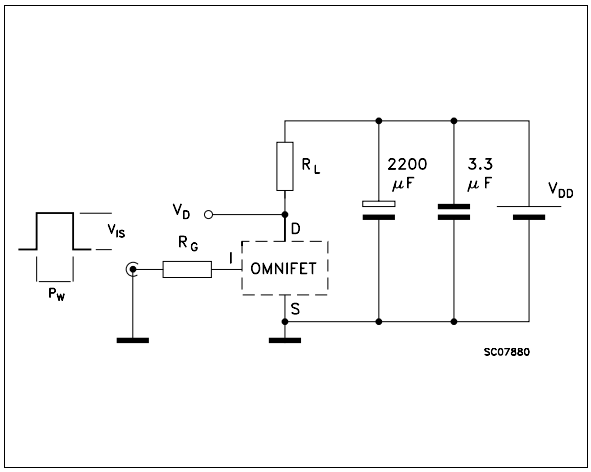

Fig. 4: Input Charge Test Circuit

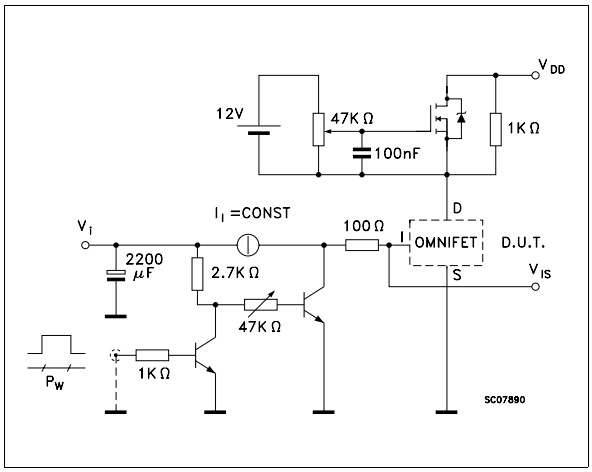

Fig. 5: Test Circuit For Inductive Load Switching And Diode Recovery Times

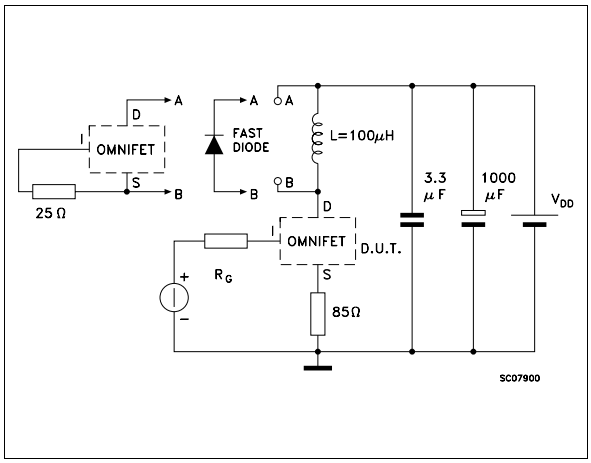

Fig. 6: Waveforms

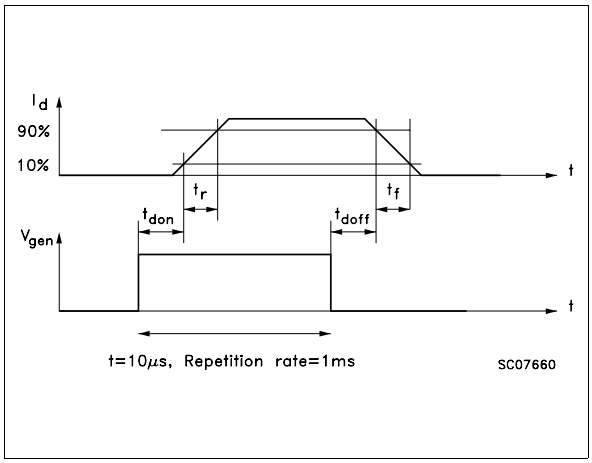

TO-220 MECHANICAL DATA

DIM.	mm.		
	MIN.	TYP	MAX.
A	4.40		4.60
b	0.61		0.88
b1	1.15		1.70
c	0.49		0.70
D	15.25		15.75
E	10		10.40
e	2.40		2.70
e1	4.95		5.15
F	1.23		1.32
H1	6.20		6.60
J1	2.40		2.72
L	13		14
L1	3.50		3.93
L20		16.40	
L30		28.90	
∅P	3.75		3.85
Q	2.65		2.95
Package Weight	1.9Gr. (Typ.)		

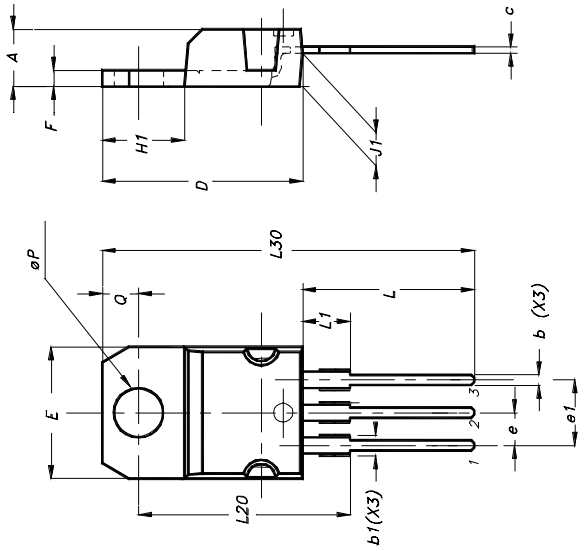

Please Read Carefully:

Information in this document is provided solely in connection with ST products. STMicroelectronics NV and its subsidiaries (“ST”) reserve the right to make changes, corrections, modifications or improvements, to this document, and the products and services described herein at any time, without notice.

All ST products are sold pursuant to ST’s terms and conditions of sale.

Purchasers are solely responsible for the choice, selection and use of the ST products and services described herein, and ST assumes no liability whatsoever relating to the choice, selection or use of the ST products and services described herein.

No license, express or implied, by estoppel or otherwise, to any intellectual property rights is granted under this document. If any part of this document refers to any third party products or services it shall not be deemed a license grant by ST for the use of such third party products or services, or any intellectual property contained therein or considered as a warranty covering the use in any manner whatsoever of such third party products or services or any intellectual property contained therein.

UNLESS OTHERWISE SET FORTH IN ST’S TERMS AND CONDITIONS OF SALE ST DISCLAIMS ANY EXPRESS OR IMPLIED WARRANTY WITH RESPECT TO THE USE AND/OR SALE OF ST PRODUCTS INCLUDING WITHOUT LIMITATION IMPLIED WARRANTIES OF MERCHANTABILITY, FITNESS FOR A PARTICULAR PURPOSE (AND THEIR EQUIVALENTS UNDER THE LAWS OF ANY JURISDICTION), OR INFRINGEMENT OF ANY PATENT, COPYRIGHT OR OTHER INTELLECTUAL PROPERTY RIGHT.

ST PRODUCTS ARE NOT DESIGNED OR AUTHORIZED FOR USE IN: (A) SAFETY CRITICAL APPLICATIONS SUCH AS LIFE SUPPORTING, ACTIVE IMPLANTED DEVICES OR SYSTEMS WITH PRODUCT FUNCTIONAL SAFETY REQUIREMENTS; (B) AERONAUTIC APPLICATIONS; (C) AUTOMOTIVE APPLICATIONS OR ENVIRONMENTS, AND/OR (D) AEROSPACE APPLICATIONS OR ENVIRONMENTS. WHERE ST PRODUCTS ARE NOT DESIGNED FOR SUCH USE, THE PURCHASER SHALL USE PRODUCTS AT PURCHASER’S SOLE RISK, EVEN IF ST HAS BEEN INFORMED IN WRITING OF SUCH USAGE, UNLESS A PRODUCT IS EXPRESSLY DESIGNATED BY ST AS BEING INTENDED FOR “AUTOMOTIVE, AUTOMOTIVE SAFETY OR MEDICAL” INDUSTRY DOMAINS ACCORDING TO ST PRODUCT DESIGN SPECIFICATIONS. PRODUCTS FORMALLY ESCC, QML OR JAN QUALIFIED ARE DEEMED SUITABLE FOR USE IN AEROSPACE BY THE CORRESPONDING GOVERNMENTAL AGENCY.

Resale of ST products with provisions different from the statements and/or technical features set forth in this document shall immediately void any warranty granted by ST for the ST product or service described herein and shall not create or extend in any manner whatsoever, any liability of ST.

ST and the ST logo are trademarks or registered trademarks of ST in various countries.
Information in this document supersedes and replaces all information previously supplied.
The ST logo is a registered trademark of STMicroelectronics. All other names are the property of their respective owners.

© 2013 STMicroelectronics - All rights reserved

STMicroelectronics group of companies

Australia - Belgium - Brazil - Canada - China - Czech Republic - Finland - France - Germany - Hong Kong - India - Israel - Italy - Japan - Malaysia - Malta - Morocco - Philippines - Singapore - Spain - Sweden - Switzerland - United Kingdom - United States of America

www.st.com