ISABELLENHÜTTE
Innovation by Tradition

ISA-PLAN® // PRECISION RESISTORS

VMS // Size 2512

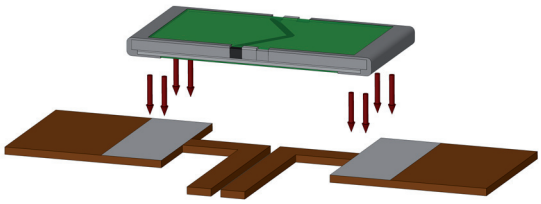

Features

- 3 W power rating at 95 °C
- Constant current up to 25 A (5 mOhm)
- Standard pad size (2512)
- High pulse power rating
- Excellent long-term stability
- Mounting: Reflow- and IR-soldering
- AEC-Q200 qualified
- RoHS 2011/65/EU compliant

RoHS

Applications

- Current sensor for power hybrid applications
- Control systems for the automotive market
- Power modules
- Frequency converters
- Switch mode power supplies

Technical data

Resistance values [1]	**Ohm**	0.005 to 1
Tolerance [1]	**%**	1 / 2 / 5
Temperature coefficient (20-60 °C)	**ppm/K**	<20
Applicable temperature range	**°C**	-65 to +170
Power rating $P_{95\,°C}$	**W**	3
Power rating $P_{70\,°C}$	**W**	4
Internal heat resistance (R_{thi})	**K/W**	<25
Dielectric withstanding voltage	**V AC/DC**	200
Inductance	**nH**	<3
Stability (at rated power) deviation after 2000h, T_K = Terminal temperature		<0.5 % (T_K=65 °C) <0.7 % (T_K=95 °C)

[1] See all standard values and tolerances on page 2

Ordering code

VMS - R010 - 1.0 - U*

- U* — * Former ordering code VMS-R010-1.0
- 1.0 — Tolerance
- R010 — Resistance value [Ohm] / „R" represents decimal point
- VMS — Type

Download from alldatasheet.com

VMS // Size 2512

Recommended solder profile

Reflow- and IR-soldering				
Temperature	**°C**	260	255	217
Time	**sec**	peak	40	90

Tape and reel information

Specification		DIN EN 60286-3
Tape width	**mm**	12
Reel size	**inch**	13
Parts per reel	**pcs**	9000
Packaging weight net	**g**	539

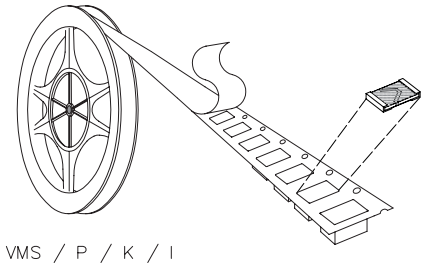

Available standard resistance values and tolerances*

Resistance values	Tolerance 1 %	Tolerance 2 %	Tolerance 5 %
R005	✓		
R0068			✓
R010	✓		✓
R012	✓		
R015	✓		
R020	✓	✓	
R022	✓		
R025	✓		
R027	✓		
R030	✓		
R033	✓		
R039	✓		
R040	✓		
R047	✓		
R050	✓		
R056	✓		
R068	✓		
R082	✓		
R100	✓		
R120	✓		
R150	✓		
R180	✓		
R200	✓		
R220	✓		
R240	✓		
R270		✓	
R300	✓		
R330	✓		
R470	✓		
R500	✓		
R680	✓		
1R00	✓		

* Further values and tolerances on request
✓ = available

Download from alldatasheet.com

VMS // Size 2512

Temperature dependence of the electrical resistance

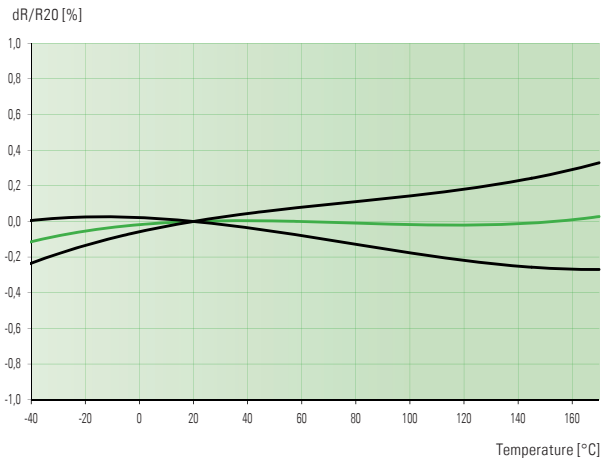

Limiting curve

Typical temperature dependence of a VMS resistor

Power derating curve

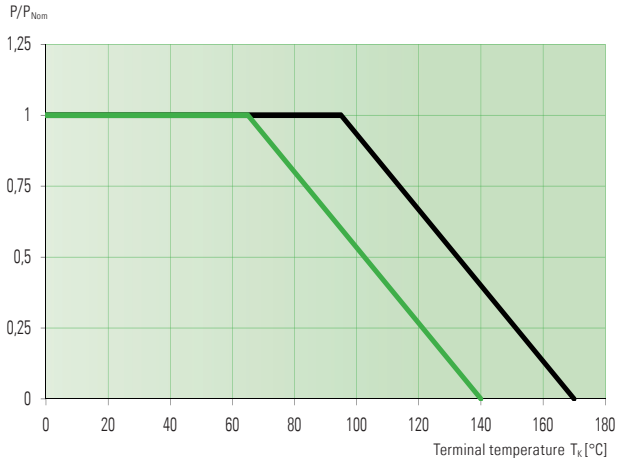

Stability < 0.7 %

Improved stability < 0.5 %

Mechanical dimensions and pcb-layout proposal (Reflow-soldering) [mm] / Drawing Z-YE-497

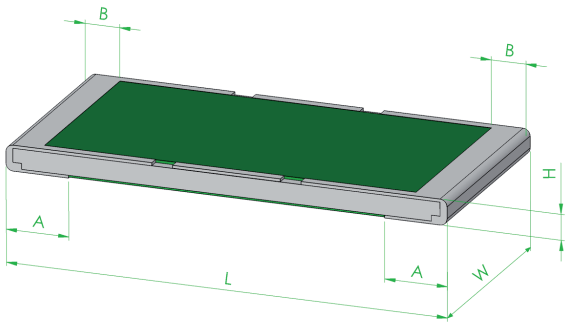

Layout 1

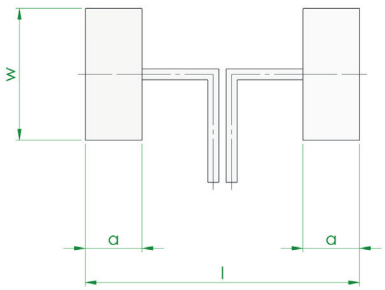

Type	L	W	H	A	B
VMS	6.35 ±0.3	3.05 ±0.2	0.4 ±0.15	0.9 ±0.2	0.5 ±0.2

Layout 2

Layout for values > 30 mOhm if TC < 20 ppm/K is required

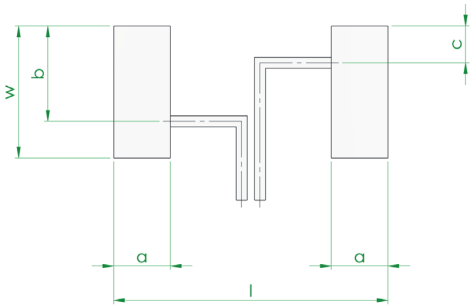

Solder pad type	l	w	a	b	c
VMS	7.5	3.6	1.55	2.6	1.0

Download from alldatasheet.com

VMS // Size 2512

Maximum pulse energy respectively pulse power for permanent operation

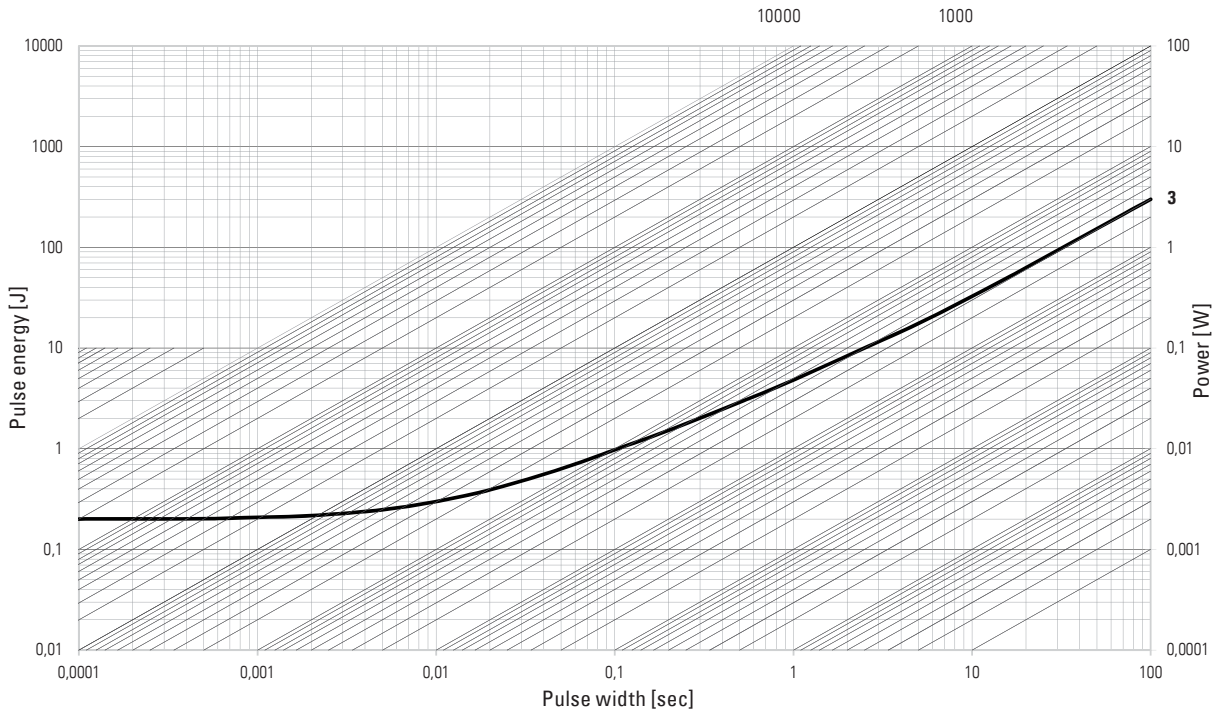

This curve is only valid for the resistance value R005. The shape of the curve in the range below 0.1 sec will be different for other resistance values. Therefore a separate qualification should be made for pulse power close to the above curve.

Specification

Parameters	Test conditions	Specified values
Temperature Cycling	2000 cycles (-55 °C to +150 °C)	±0.5 %
Low Temperature Storage	-65 °C for 250 h	±0.1 %
Resistance to Soldering Heat	260 °C for 10 sec / 8h steam aging	±0.3 %
Moisture Resistance	MIL-STD-202 method 106	±0.3 %
Mechanical Shock	100 g, 6 ms half sine	±0.2 %
Vibration, High Frequency	10 g, 10-2000 Hz, 24 h each axis	±0.2 %
Operational Life	2000 h, T_K max at rated power	±0.7 %, T_K = 95 °C
High Temperature Exposure	2000 h / 170 °C	±1.0 %
Bias Humidity	+85 °C, 85 r.F., 1000 h, powered	±0.5 %

Disclaimer // All products, product specifications and data are subject to change without notice.

The product specifications do not expand or otherwise modify Isabellenhütte's terms and conditions of sale, including but not limited to, the warranty expressed therein. Isabellenhütte makes no warranty, representation or guarantee other than as set forth in its terms and conditions of sale.

Information provided in datasheets and/or specifications may vary from actual results in different applications. Any statements made by Isabellenhütte regarding the suitability of products for certain types of applications are based on its knowledge of typical requirements that are often placed on its products. It is the customer's responsibility to validate that a particular product with the properties described in the product specification is suitable for use in the application intended.

No license, express or implied, or otherwise, to any intellectual property rights is granted by this document.

Any and all liability arising out of the application or use of any product shall be as set forth in Isabellenhütte's terms and conditions of sale.

Download from alldatasheet.com