VMP-2R Series VECTOR I&Q MODULATORS

10 to 1000 MHz / Narrowband QPSK / For MSK Systems / 10% Bandwidth / Hermetic PC Package

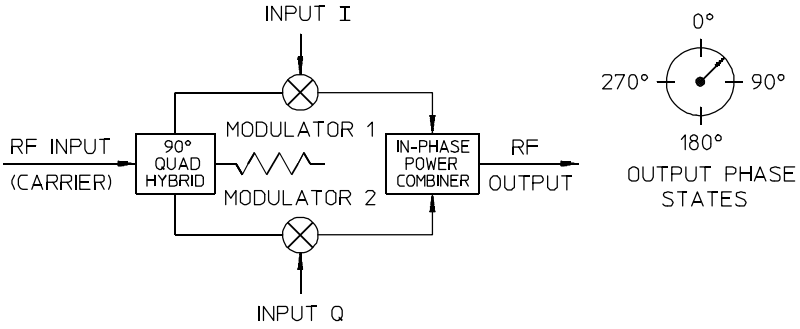

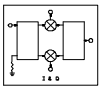

PRINCIPAL SPECIFICATIONS

Model Number	Center Frequency, f_o, MHz	Usable RF Bandwidth
VMP-2R-***B	10 - 1000	10% of f_o

For complete Model Number replace ***with desired Center Frequency, f_o in MHz.

GENERAL SPECIFICATIONS

RF Input:	+10 dBm, nom.
Modulation Inputs:	0 dBm max.
VSWR:	1.5:1 max.
Impedance:	50 Ω nom.
Insertion Loss:	12 dB max.
	(below modulation input)
Modulation Accuracy	
(measured @ 4 quadrants, 0 dBm input)	
Amplitude Balance:	1 dB
Phase Balance:	± 5°
Carrier Isolation:	35 dB typ.
Dynamic Range (output):	20 dB nom.
Operating Temperature:	– 55° to +85°C

General Notes:

1. A vector modulator is used to phase modulate an RF carrier with complex analog signals.
2. Merrimac Vector Modulators consist of a quadrature hybrid and an in-phase power divider.
3. Units in the VMP-2R series are capable of modulating the carrier at up to 10% of the RF bandwidth.
4. These vector modulators comply with the relevant sections of MIL-M-28837 and may be supplied screened for compliance with additional specifications for military and space applications requiring the highest reliability.

AVAILABLE OPTIONS

Close tolerance phase and amplitude balance versions are available in custom designs. Units with higher center frequency (e.g.,1500 MHz to 3 GHz) are available in the VMP-2S series.

Meri-Pac™ R-Package

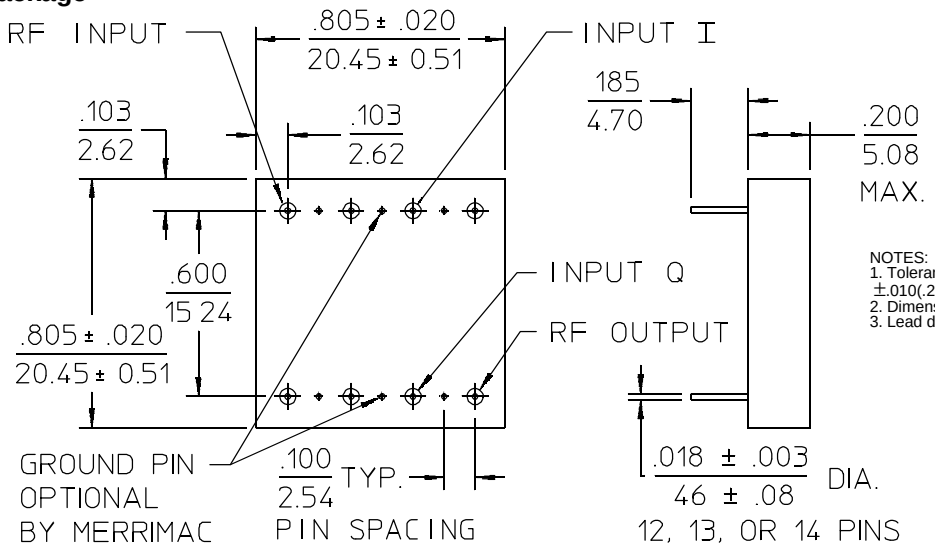

29Apr96

For further information contact ***MERRIMAC / 41 Fairfield Pl, West Caldwell, NJ, 07006 / 973-575-1300 / FAX 973-575-0531***