PART NO.	"A"	"B"	"C"	"D"	"E"
VMCG-50-MPBK-K	1.83 (46.5)	1.67 (42.3)	.71 (18)	.104 (2.6)	.105 (2.7)
VMCG-65-MPBK-K	2.56 (65.0)	2.22 (56.5)		.118 (3.0)	.079 (2.0)
VMCG-90-MPBK-K	3.54 (90.0)	3.21 (81.5)			
VMCG-135-MPBK-K	5.31 (135.0)	4.98 (126.5)	.75 (19)		
VMCG-160-MPBK-K	6.30 (160.0)	4.43 (112.5)			
VMCG-330-MPBK-K	4.73 (120.1)	4.43 (112.5)	.71 (18)		

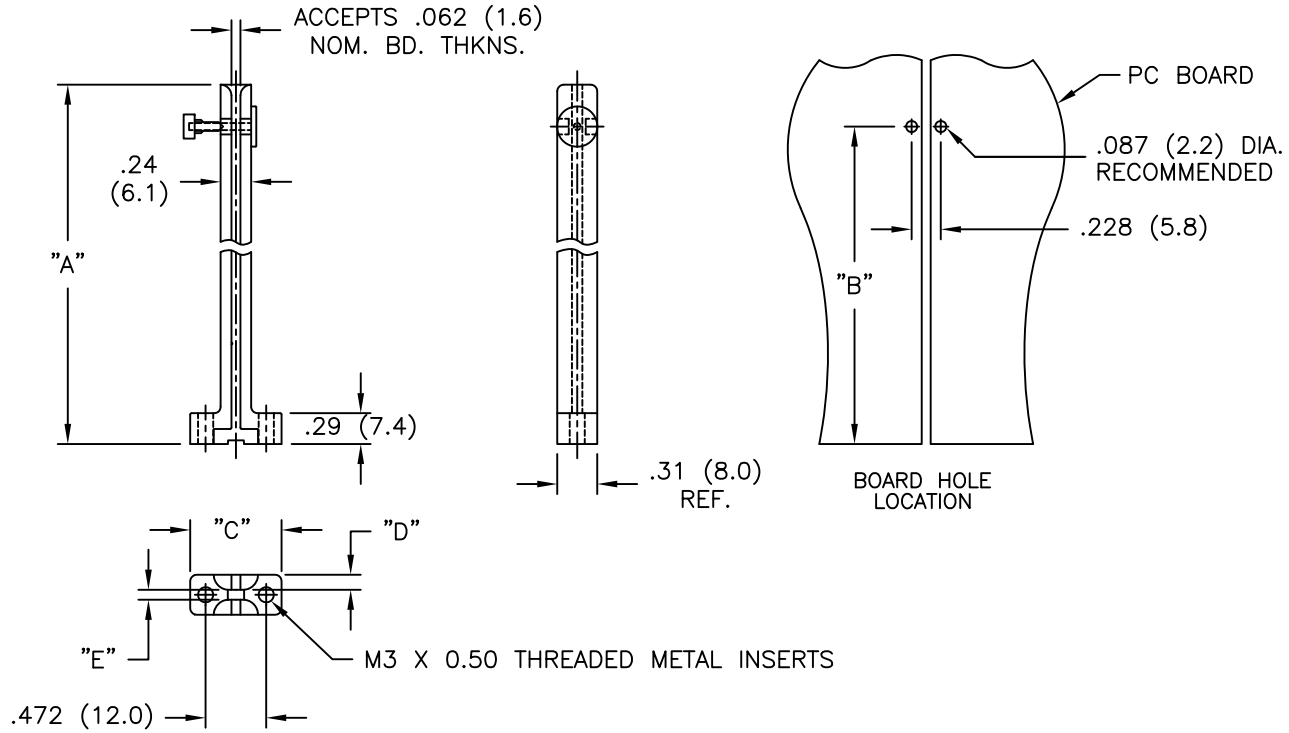

NOTES:

1. MATERIAL: NYLON 6, GLASS FILLED, (RMS-38)
   -FLAME RETARDANT NYLON 6 UL 94 V-0,
   30% GLASS FILLED (RMS-371), AVAILABLE
   BY SPECIAL ORDER.
   TO ORDER US P/N: VMCG-XX-MPBK-FR-K
2. COLOR: GRAY.
3. COMPONENTS:

A) LOCKING BUTTON: HDPE (RMS-284)
B) SCREW: STAINLESS STEEL (RMS-228)
C) THREADED INSERT: BRASS (RMS-231)
D) WASHER: STAINLESS STEEL (RMS-228)

REV	DESCRIPTION	ENGR	DATE
M	REMOVED .079 (2) DIM. SEE CO 200552	SK	07.07.10
L	ADDED "C" DIMENSION, SEE CO #200492	DZ	02.09.10
K	SEE CO 200084 FOR CHANGES	SK	12.06.07
J	SEE ECN #1356 FOR CHANGES	SK	08.22.07
I	SEE ECN #1285 FOR CHANGES	SK	02.12.07
H	SEE ECN #1146 FOR CHANGES	SJ	03.28.06
X	SEE ENGINEERING FOR REV. A~G		

TITLE: VERTICAL MOUNT CARD GUIDE, TYPE 1

DWG IN IN (MM)

TOLERANCES UNLESS NOTED
.XX=±.010
.XXX=±.005
FRAC=±1/64
ANG=±1°

FILE # VMCG-1
MAT'L: SEE NOTES
RE: RICHCO, INC.

DWN: P.B.
CHKD:
DT: 03.23.94
ENG:

RICHCO INC.
ENG@RICHCO-INC.COM
(773) 539-4060

FINAL

PART # SEE TABLE

PRINT TYPE CA