NPN SILICON RF POWER TRANSISTOR

DESCRIPTION:

The **ASI VMB80-28F** is Designed for

FEATURES:

-
-
- ***Omnigold***™ Metalization System

MAXIMUM RATINGS

I_C	9.0 A
V_{CBO}	65 V
V_{CEO}	36 V
V_{EBO}	4.0 V
P_{DISS}	103 W @ T_C = 25 °C
T_J	-65 °C to +200 °C
T_{STG}	-65 °C to +150 °C
θ_{JC}	1.05 °C/W

PACKAGE STYLE .380 4L FLG

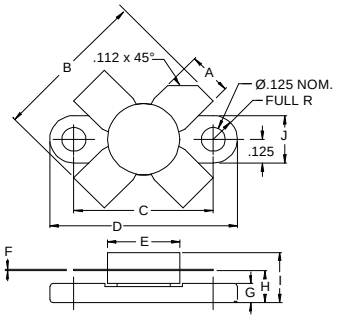

DIM	MINIMUM inches / mm	MAXIMUM inches / mm
A	.220 / 5.59	.230 / 5.84
B	.785 / 19.94	
C	.720 / 18.29	.730 / 18.54
D	.970 / 24.64	.980 / 24.89
E		.385 / 9.78
F	.004 / 0.10	.006 / 0.15
G	.085 / 2.16	.105 / 2.67
H	.160 / 4.06	.180 / 4.57
I		.280 / 7.11
J	.240 / 6.10	.255 / 6.48

ORDER CODE: ASI10748

CHARACTERISTICS T_C = 25 °C

SYMBOL	TEST CONDITIONS	MINIMUM	TYPICAL	MAXIMUM	UNITS
BV_{CEO}	I_C = 200 mA	36			V
BV_{CES}	I_C = 200 mA	65			V
BV_{EBO}	I_E = 10 mA	4.0			V
I_{CES}	V_{CE} = 28 V			10	mA
h_{FE}	V_{CE} = 5.0 V I_C = 500 mA	5.0		---	---
C_{OB}	V_{CB} = 28 V f = 1.0 MHz			200	pF
P_G	V_{CC} = 28 V P_{OUT} = 80 W f = 88 MHz	10			dB
η_C			60		%

Specifications are subject to change without notice.