Honeywell

THE POWER OF **CONNECTED**

AMR 4-Pin Quadrature Sensor Integrated Circuit

VM821Q1

32336294

Issue D

Datasheet

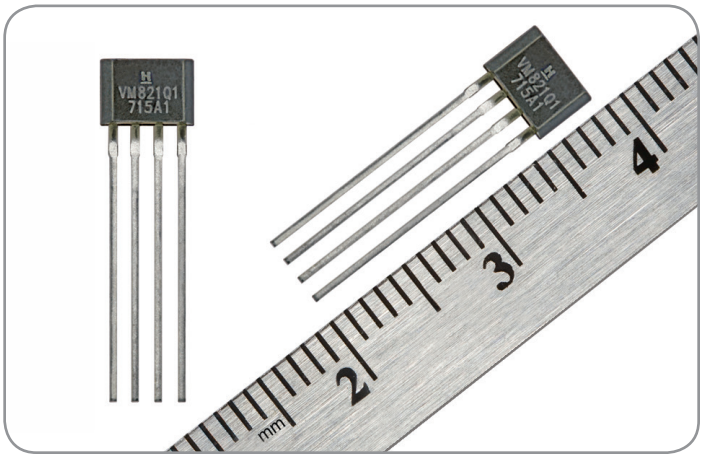

DESCRIPTION

Honeywell's Anisotropic Magnetoresistive (AMR) 4-Pin Quadrature Sensor Integrated Circuit (IC) is designed to detect the speed and direction and position of a ring magnet encoder target using a unique* bridge design. The frequency of the output is proportional to the rotational speed of the target, and the rotational direction is encoded by the phase between the outputs. The sensor IC works over a wide range of speeds, temperatures and air gaps.

VALUE TO CUSTOMERS

The VM821Q1 sensor IC has a higher sensitivity AMR bridge array that operates with a larger airgap than Hall-effect sensor ICs, which allows for enhanced design flexibility and assembly tolerances. The sensor IC has been optimized to provide an output that is not affected by target runout or sudden air gap changes. It is insensitive to magnet pole size, allowing one sensor to be paired with different ring magnet applications.

DIFFERENTIATION

Honeywell's unique solution utilizes the AMR bridge in saturation, which provides a more stable output response when the system has vibration, sudden air gap changes, or target runout without requiring complex magnitude compensation algorithms. The AMR signal has greater sensitivity than Hall-effect sensor ICs, and does not require automatic gain control or chopper stabilization that can lead to increased jitter over the operating range.

**Patent Pending*

FEATURES

- Integrated quadrature sensor IC
- Pole size independent operation
- 4-pin quadrature, open collector outputs
- -40°C to 150°C operating temperature range
- Zero speed operation
- No calibration required
- Insensitive to mechanical vibration
- Protection against reverse polarity and short circuit

POTENTIAL APPLICATIONS

- Industrial speed and direction and position feedback
- Encoders
- Conveyer rollers speed, process line speed and direction
- Gearbox output speed
- Positioning roller speed and direction
- Garage door opening systems
- Induction motors
- Fan speed systems
- Electric actuated blind position
- Pumps and compressors
- Integrated seals and bearings

PORTFOLIO

The Honeywell VM821Q1 AMR 4-Pin Quadrature Sensor IC joins the following related products:

- VM421D1 AMR 3-Pin PWM Speed and Direction Sensor IC
- VM721D1 AMR 2-Pin PWM Speed and Direction Sensor IC
- VM721V1 AMR 2-Pin Speed Sensor IC

Table 1. Operating Characteristics (At 4.0 V ≤ V_S ≤ 24 V, -40°C ≤ T_A ≤ 150°C, unless otherwise specified.)

Characteristic	Symbol	Condition	Min.	Typ.	Max.	Unit
Supply voltage	V_S	—	4.0	—	24	V
Supply current	I_{CC}	—	—	—	20	mA
Output low	V_{sat}	V_S = 5 V, I_{ol} = 5 mA	—	—	400	mV
Output leakage	I_{oh}	V_{oh} = 24 V	—	—	10	µA
Output current	I_{ol}	—	—	—	20	mA
Duty cycle	—	2 mm pole width	40	50	60	%
Phase	—	2 mm pole width	70	90	110	°
Output switching time: rise time fall time	 t_r t_f	 Vs = 5 V, R_L = 1 kOhm to 5 V, C_L = 20 pF Vs = 5 V, R_L = 1 kOhm to 5 V, C_L = 20 pF	 — —	 — —	 1.5 1.5	µs
Switching frequency	f	—	—	35	—	kHz

Table 2. Output Configuration

Characteristic	Condition	Configuration
Number of pulses per pole	—	1
Phase polarity	rotation from pin 4 to pin 1 as shown in Figure 4.	output A leads B

Table 3. Application Requirements (At 4.0 V ≤ V_S ≤ 24 V, -40°C ≤ T_A ≤ 150°C.)

Characteristic	Symbol	Condition	Min.	Typ.	Max.	Unit
Magnetic flux	B	D_{max}, max. air gap, max. temp	±30	—	—	Gauss
Magnetic flux with valid direction indication, increased jitter	B	D_{max}, max. air gap, max. temp	±10	—	—	Gauss
Metering resistor	R	—	50	160	—	Ohm

Table 4. Absolute Maximum Ratings

Characteristic	Symbol	Condition	Min.	Typ.	Max.	Unit
Operating temperature	T_a	—	-40 [-40]	—	150 [302]	°C [°F]
Junction temperature	T_J	—	-40 [-40]	—	165 [329]	°C [°F]
Storage temperature	T_s	—	-40 [-40]	—	150 [302]	°C [°F]
Thermal resistance	$R_{\theta JA}$	—	—	—	—	°C/W
Supply voltage	V_S	—	-26.5	—	26.5	V
Soldering temperature	—	3 s max.	—	—	260 [500]	°C [°F]
ESD (HBM)	V_{ESD}	JEDEC JS-002-2014	—	—	±6	kV
Output short circuit	—	with no current limiting resistor	—	—	24	V

NOTICE

Absolute maximum ratings are the extreme limits the device will momentarily withstand without damage to the device. Electrical and mechanical characteristics are not guaranteed if the rated voltage and/or currents are exceeded, nor will the device necessarily operate at absolute maximum ratings.



Figure 1. Block Diagram

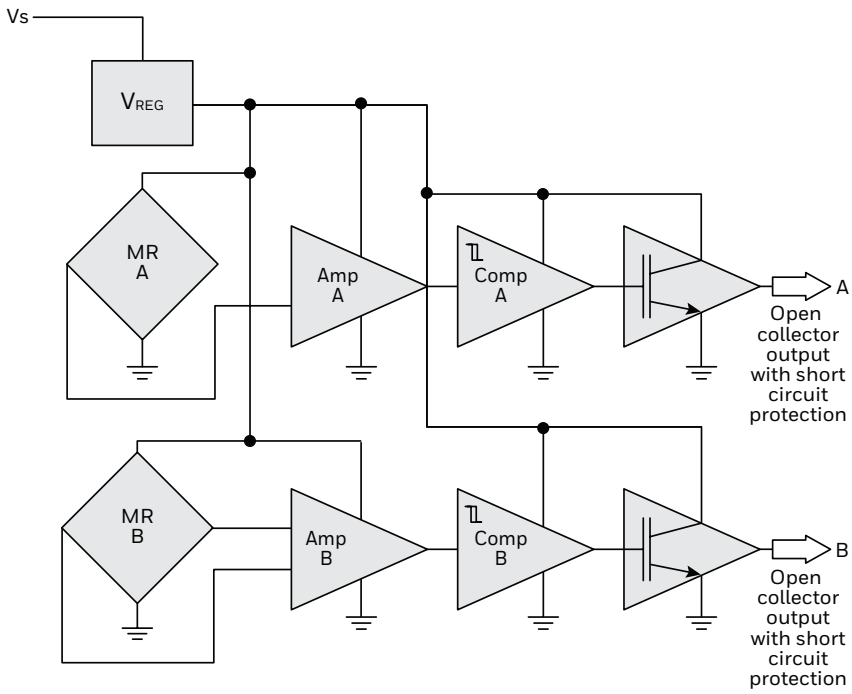

Figure 2. Basic Application Circuit

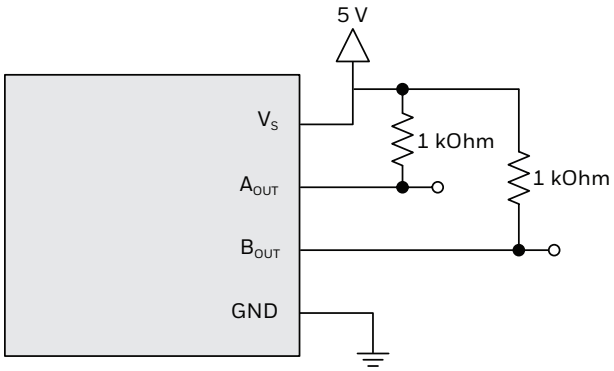

Figure 3. Transfer Characteristics

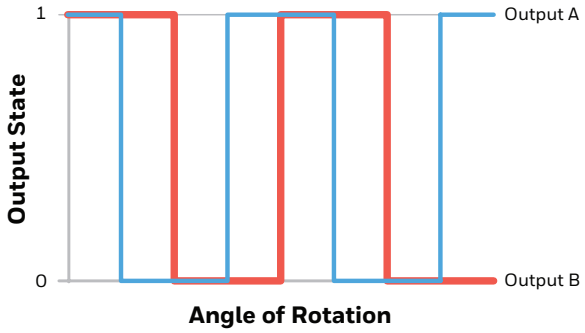

Phase Calculation Definition

This method isolates phase from duty cycle. It also best correlates to analysis of the fundamental frequency in the frequency domain.

$$\text{Phase } (^{o}) = \left(\frac{B_{rising} + B_{falling}}{2} - \frac{A_{rising} + A_{falling}}{2} \right) * \frac{360}{T}$$

Where:

A_{rising} = rising edge of output A

$A_{falling}$ = falling edge of output A

B_{rising} = nearest falling edge of output B to A_{rising}

$B_{falling}$ = next falling edge of output B

T = period of one cycle

Figure 4. Sensor IC Mounting Orientation

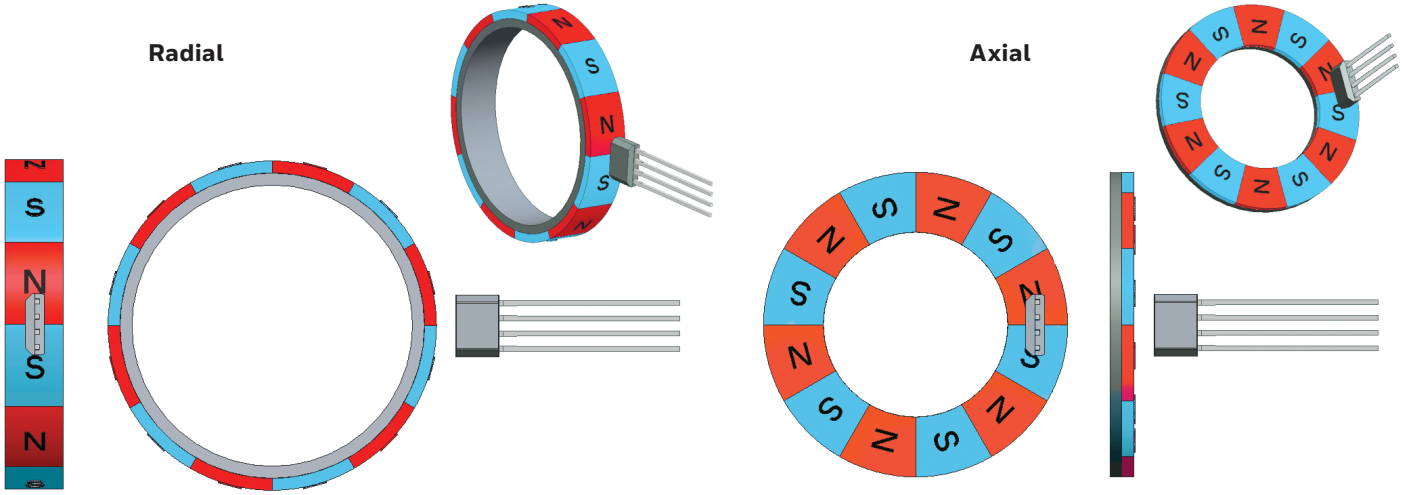

Figure 5. Dimensions and Product Marking (For reference only mm/[in])

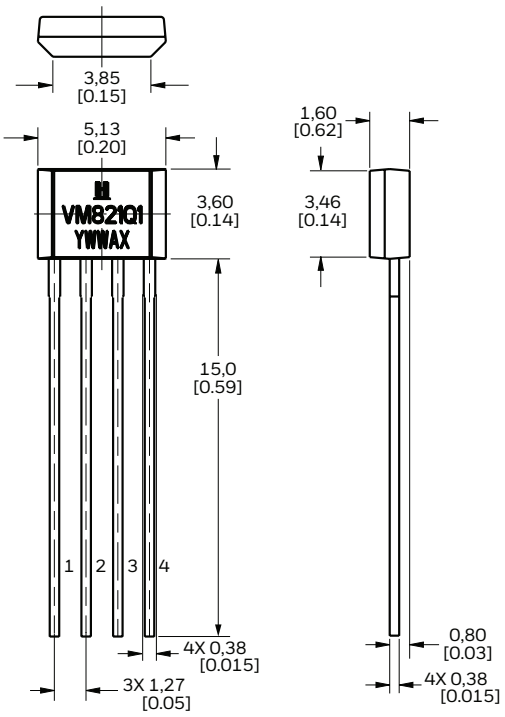

Product Marking

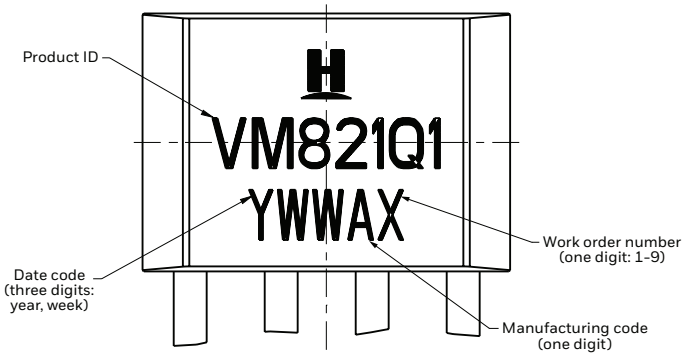

Sensing Element Edge Distance

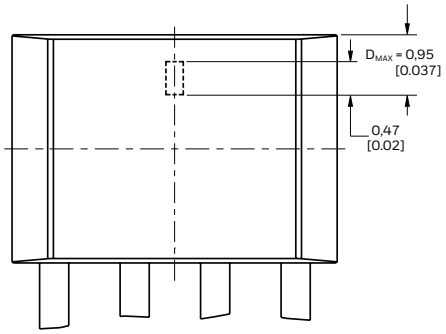

Pinout

Pin Number	Symbol	Function
1	V_S	supply voltage
2	A	output
3	B	output
4	GND	ground

ADDITIONAL INFORMATION

The following associated literature is available on the Honeywell web site at sensing.honeywell.com:

- Installation instructions
- Application notes
- Technical notes
- CAD Models
- Evaluation samples available from your local Honeywell contact

⚠ WARNING
PERSONAL INJURY

DO NOT USE these products as safety or emergency stop devices or in any other application where failure of the product could result in personal injury.

Failure to comply with these instructions could result in death or serious injury.

⚠ WARNING
MISUSE OF DOCUMENTATION

- The information presented in this datasheet is for reference only. Do not use this document as a product installation guide.
- Complete installation, operation, and maintenance information is provided in the instructions supplied with each product.

Failure to comply with these instructions could result in death or serious injury.

Warranty/Remedy

Honeywell warrants goods of its manufacture as being free of defective materials and faulty workmanship during the applicable warranty period. Honeywell's standard product warranty applies unless agreed to otherwise by Honeywell in writing; please refer to your order acknowledgment or consult your local sales office for specific warranty details. If warranted goods are returned to Honeywell during the period of coverage, Honeywell will repair or replace, at its option, without charge those items that Honeywell, in its sole discretion, finds defective. **The foregoing is buyer's sole remedy and is in lieu of all other warranties, expressed or implied, including those of merchantability and fitness for a particular purpose. In no event shall Honeywell be liable for consequential, special, or indirect damages.**

While Honeywell may provide application assistance personally, through our literature and the Honeywell web site, it is buyer's sole responsibility to determine the suitability of the product in the application.

Specifications may change without notice. The information we supply is believed to be accurate and reliable as of this writing. However, Honeywell assumes no responsibility for its use.

For more information

Honeywell Sensing and Internet of Things services its customers through a worldwide network of sales offices and distributors. For application assistance, current specifications, pricing or the nearest Authorized Distributor, visit sensing.honeywell.com or call:

Asia Pacific	+65 6355-2828
Europe	+44 (0) 1698 481481
USA/Canada	+1-800-537-6945

Honeywell Sensing and Internet of Things
9680 Old Bailes Road
Fort Mill, SC 29707
www.honeywell.com

32336294-D-EN | D | 10/18
© 2018 Honeywell International Inc.

Honeywell