TDK

July 2013

Inductors for Power Circuits

Wound Ferrite

VLS-E series

VLS201610E
VLS201612E
VLS2010E
VLS2012E
VLS252008E
VLS252010E
VLS252012E
VLS252015E
VLS3010E
VLS3012E
VLS3015E
VLS4012E

REMINDERS FOR USING THESE PRODUCTS

Before using these products, be sure to request the delivery specifications.

SAFETY REMINDERS

Please pay sufficient attention to the warnings for safe designing when using these products.

⚠ REMINDERS

- The storage period is less than 12 months. Be sure to follow the storage conditions (Temperature: 5 to 40°C, Humidity: 10 to 75% RH or less).
  If the storage period elapses, the soldering of the terminal electrodes may deteriorate.
- Do not use or store in locations where there are conditions such as gas corrosion (salt, acid, alkali, etc.).
- Before soldering, be sure to preheat components.
  The preheating temperature should be set so that the temperature difference between the solder temperature and chip temperature does not exceed 150°C.
- Soldering corrections after mounting should be within the range of the conditions determined in the specifications.
  If overheated, a short circuit, performance deterioration, or lifespan shortening may occur.
- When embedding a printed circuit board where a chip is mounted to a set, be sure that residual stress is not given to the chip due to the overall distortion of the printed circuit board and partial distortion such as at screw tightening portions.
- Self heating (temperature increase) occurs when the power is turned ON, so the tolerance should be sufficient for the set thermal design.
- Carefully lay out the coil for the circuit board design of the non-magnetic shield type.
  A malfunction may occur due to magnetic interference.
- Use a wrist band to discharge static electricity in your body through the grounding wire.
- Do not expose the products to magnets or magnetic fields.
- Do not use for a purpose outside of the contents regulated in the delivery specifications.
- The products listed on this catalog are intended for use in general electronic equipment (AV equipment, telecommunications equipment, home appliances, amusement equipment, computer equipment, personal equipment, office equipment, measurement equipment, industrial robots) under a normal operation and use condition.
  The products are not designed or warranted to meet the requirements of the applications listed below, whose performance and/or quality require a more stringent level of safety or reliability, or whose failure, malfunction or trouble could cause serious damage to society, person or property.
  If you intend to use the products in the applications listed below or if you have special requirements exceeding the range or conditions set forth in the each catalog, please contact us.

(1) Aerospace/Aviation equipment
(2) Transportation equipment (cars, electric trains, ships, etc.)
(3) Medical equipment
(4) Power-generation control equipment
(5) Atomic energy-related equipment
(6) Seabed equipment
(7) Transportation control equipment
(8) Public information-processing equipment
(9) Military equipment
(10) Electric heating apparatus, burning equipment
(11) Disaster prevention/crime prevention equipment
(12) Safety equipment
(13) Other applications that are not considered general-purpose applications

When designing your equipment even for general-purpose applications, you are kindly requested to take into consideration securing protection circuit/device or providing backup circuits in your equipment.

Inductors for Power Circuits

Wound Ferrite

Product compatible with RoHS directive
Halogen-free
Compatible with lead-free solders

Overview of the VLS-E Series

FEATURES

- Magnetic shield type wound inductor for power circuits.
- Low-profile product lineup with max. heights of 0.8mm, 0.95mm, 1.0mm, 1.2mm, and 1.5mm allowing for different usages.
- High magnetic shield construction and compatible with high-density mounting.

APPLICATION

Smart phones, tablet terminals, HDDs, SSDs, DVCs, DSCs, mobile display panels, portable game devices, compact power supply modules, other

PART NUMBER CONSTRUCTION

VLS | 201610 | E | T | - | R47 | N

Series name	LxWxH Dimensions (mm)		internal code	Packaging style		Inductance (µH)		Inductance tolerance
VLS	201610	2.0×1.6×1.0	E	T	Taping	R47	0.47	N
	201612	2.0×1.6×1.2				2R2	2.2	
	2010	2.0×2.0×1.0				100	10	
	2012	2.0×2.0×1.2						
	252008	2.5×2.0×0.8						
	252010	2.5×2.0×1.0						
	252012	2.5×2.0×1.2						
	252015	2.5×2.0×1.5						
	3010	3.0×3.0×1.0						
	3012	3.0×3.0×1.2						
	3015	3.0×3.0×1.5						
	4012	4.0×4.0×1.2						

OPERATING TEMPERATURE RANGE, PACKAGE QUANTITY, PRODUCT WEIGHT

Type	Temperature range		Package quantity	Individual weight
	Operating temperature*	Storage temperature**		
	(°C)	(°C)	(pieces/reel)	(mg)
VLS201610E	–40 to +105	–40 to +105	2000	12
VLS201612E	–40 to +105	–40 to +105	2000	14
VLS2010E	–40 to +105	–40 to +105	2000	16
VLS2012E	–40 to +105	–40 to +105	2000	17
VLS252008E	–40 to +105	–40 to +105	2000	17
VLS252010E	–40 to +105	–40 to +105	2000	15
VLS252012E	–40 to +105	–40 to +105	2000	24
VLS252015E	–40 to +105	–40 to +105	2000	28
VLS3010E	–40 to +105	–40 to +105	2000	36
VLS3012E	–40 to +105	–40 to +105	2000	40
VLS3015E	–40 to +105	–40 to +105	2000	52
VLS4012E	–40 to +105	–40 to +105	1000	67

* Operating temperature range includes self-temperature rise.
** The Storage temperature range is for after the circuit board is mounted.

- RoHS Directive Compliant Product: See the following for more details related to RoHS Directive compliant products. http://www.tdk.co.jp/rohs/
- Halogen-free: Indicates that Cl content is less than 900ppm, Br content is less than 900ppm, and that the total Cl and Br content is less than 1500ppm.

• All specifications are subject to change without notice.

Overview of the VLS-E Series

RECOMMENDED REFLOW PROFILE

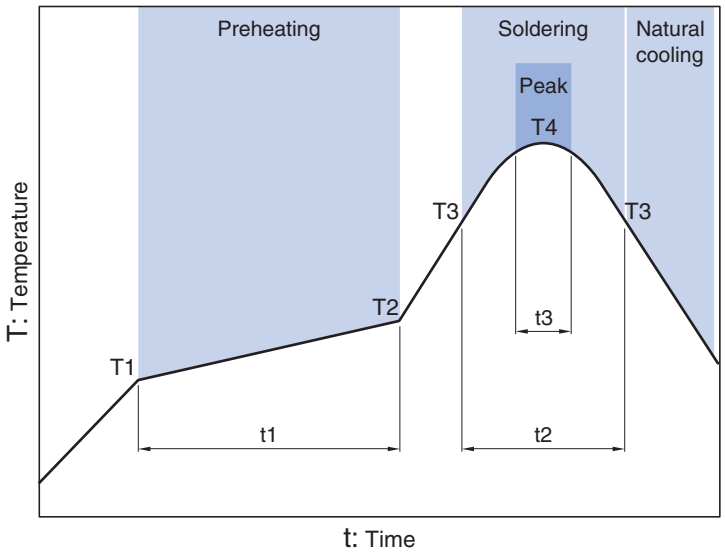

Preheating			Soldering		Peak	
Temp.		Time	Temp.	Time	Temp.	Time
T1	T2	t1	T3	t2	T4	t3
150°C	180°C	60 to 120s	230°C	30s	260°C	10s

VLS-E series

VLS201610E Type



SHAPE & DIMENSIONS

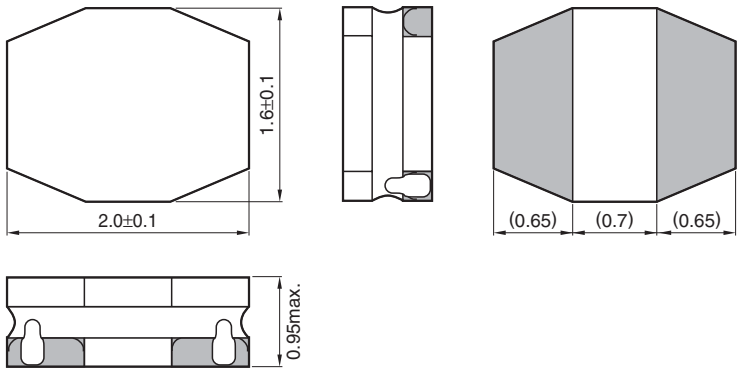

Dimensions in mm

RECOMMENDED LAND PATTERN

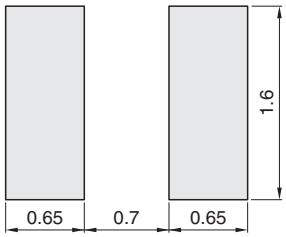

Dimensions in mm

VLS-E series VLS201610E Type

■ELECTRICAL CHARACTERISTICS

□CHARACTERISTICS SPECIFICATION TABLE

L		Measuring frequency (MHz)	DC resistance (Ω)		Rated current*(A)			Part No.
					max.	typ.		
(μH)	Tolerance		max.	typ.	Idc1	Idc1	Idc2	
0.47	±30%	1.0	0.065	0.054	1.85	2.10	1.95	VLS201610ET-R47N
0.68	±30%	1.0	0.086	0.072	1.65	1.85	1.65	VLS201610ET-R68N
1.0	±30%	1.0	0.119	0.099	1.35	1.50	1.40	VLS201610ET-1R0N
1.5	±30%	1.0	0.181	0.151	1.10	1.20	1.15	VLS201610ET-1R5N
2.2	±20%	1.0	0.276	0.230	0.94	1.05	0.95	VLS201610ET-2R2M
3.3	±20%	1.0	0.458	0.382	0.75	0.84	0.73	VLS201610ET-3R3M
4.7	±20%	1.0	0.554	0.462	0.64	0.72	0.67	VLS201610ET-4R7M
6.8	±20%	1.0	0.840	0.700	0.53	0.59	0.54	VLS201610ET-6R8M
10	±20%	1.0	1.380	1.150	0.40	0.45	0.42	VLS201610ET-100M

* Rated current: smaller value of either Idc1 or Idc2.
Idc1: When based on the inductance change rate (30% below the nominal value)
Idc2: When based on the temperature increase (Temperature increase of 40°C by self heating)

○ Measurement equipment

Measurement item	Product No.	Manufacturer
L	4194A	Agilent Technologies
DC resistance	VP-2941A	Panasonic
Rated current Idc1	4285A+42841A+42842C	Agilent Technologies

＊ Equivalent measurement equipment may be used.

VLS-E series VLS201610E Type

■ELECTRICAL CHARACTERISTICS

□L FREQUENCY CHARACTERISTICS GRAPH

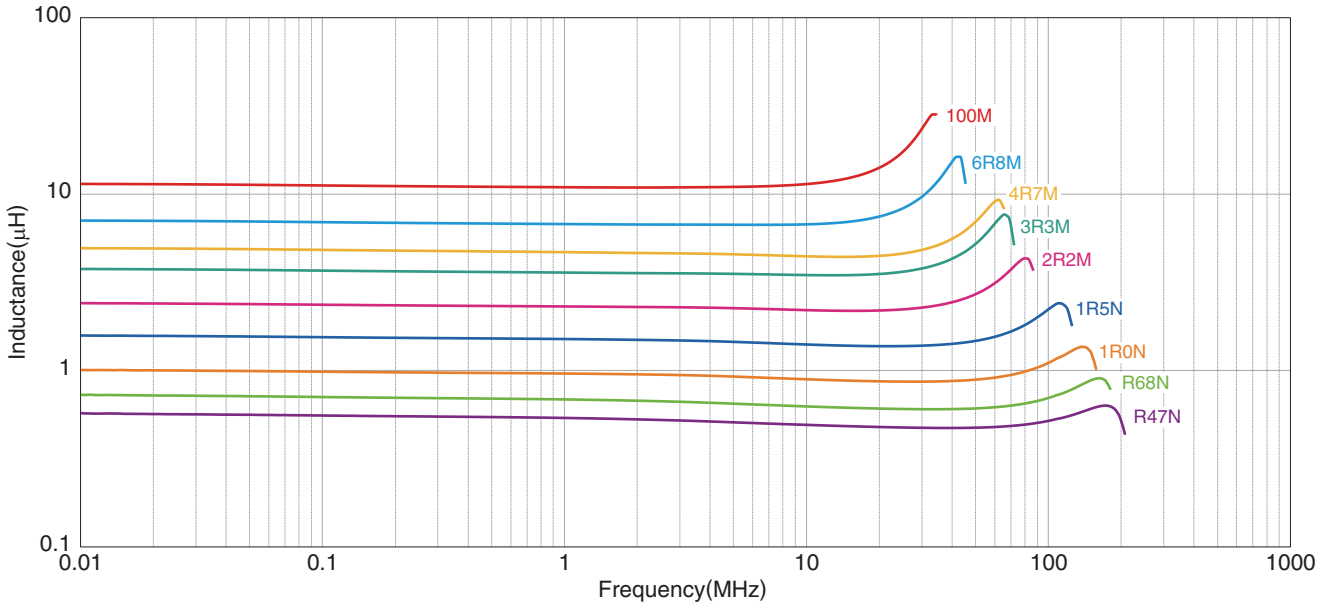

○ Measurement equipment

Product No.	Manufacturer
4294A	Agilent Technologies

＊ Equivalent measurement equipment may be used.

VLS-E series VLS201610E Type

■ELECTRICAL CHARACTERISTICS

□INDUCTANCE VS. DC BIAS CHARACTERISTICS GRAPH

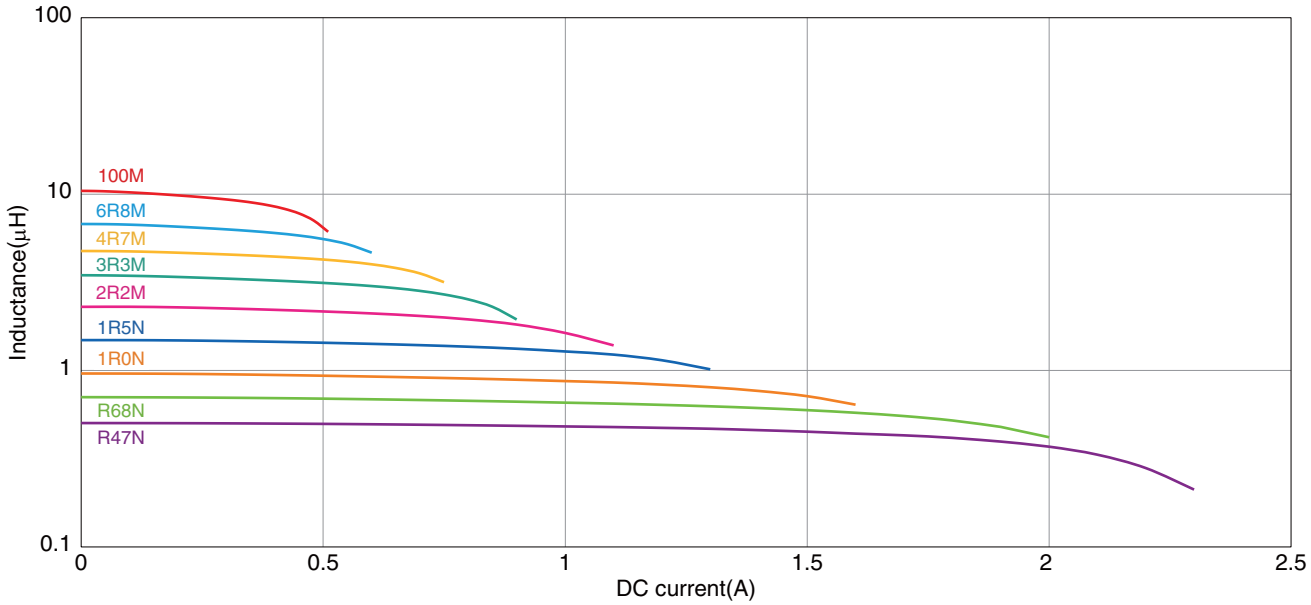

○ Measurement equipment

Product No.	Manufacturer
4285A+42841A+42842C	Agilent Technologies

＊ Equivalent measurement equipment may be used.

VLS-E series

VLS201612E Type



SHAPE & DIMENSIONS

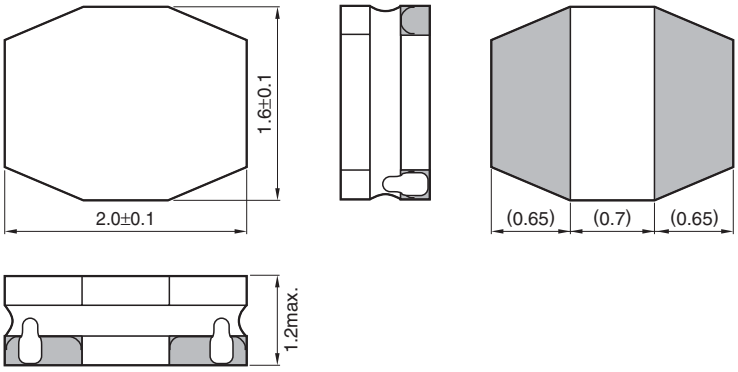

Dimensions in mm

RECOMMENDED LAND PATTERN

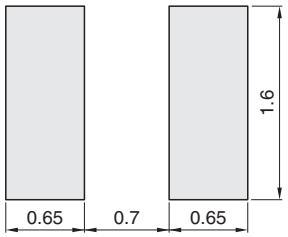

Dimensions in mm

VLS-E series VLS201612E Type

■ELECTRICAL CHARACTERISTICS

□CHARACTERISTICS SPECIFICATION TABLE

L		Measuring frequency (MHz)	DC resistance (Ω)		Rated current*(A)			Part No.
					max.	typ.		
(μH)	tolerance		max.	typ.	Idc1	Idc1	Idc2	
0.47	±30%	1.0	0.063	0.052	1.90	2.15	2.00	VLS201612ET-R47N
0.68	±30%	1.0	0.072	0.060	1.70	1.90	1.85	VLS201612ET-R68N
1.0	±30%	1.0	0.093	0.077	1.50	1.65	1.65	VLS201612ET-1R0N
1.5	±30%	1.0	0.159	0.132	1.20	1.30	1.25	VLS201612ET-1R5N
2.2	±20%	1.0	0.195	0.162	1.05	1.15	1.15	VLS201612ET-2R2M
3.3	±20%	1.0	0.357	0.297	0.79	0.88	0.85	VLS201612ET-3R3M
4.7	±20%	1.0	0.438	0.365	0.70	0.78	0.75	VLS201612ET-4R7M
6.8	±20%	1.0	0.708	0.590	0.58	0.65	0.60	VLS201612ET-6R8M
10	±20%	1.0	1.026	0.855	0.47	0.53	0.50	VLS201612ET-100M

* Rated current: smaller value of either Idc1 or Idc2.
Idc1: When based on the inductance change rate (30% below the nominal value)
Idc2: When based on the temperature increase (Temperature increase of 40°C by self heating)

○ Measurement equipment

Measurement item	Product No.	Manufacturer
L	4194A	Agilent Technologies
DC resistance	VP-2941A	Panasonic
Rated current Idc1	4285A+42841A+42842C	Agilent Technologies

＊ Equivalent measurement equipment may be used.

VLS-E series VLS201612E Type

■ELECTRICAL CHARACTERISTICS

□L FREQUENCY CHARACTERISTICS GRAPH

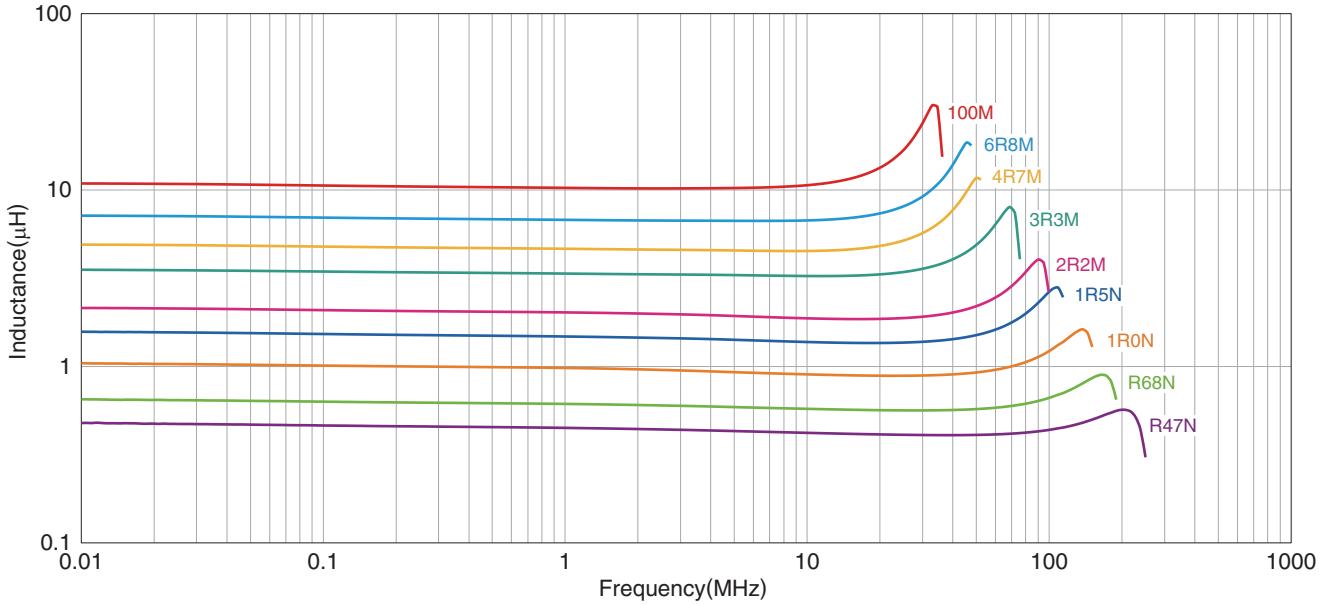

○ Measurement equipment

Product No.	Manufacturer
4294A	Agilent Technologies

＊ Equivalent measurement equipment may be used.

VLS-E series VLS201612E Type

■ELECTRICAL CHARACTERISTICS

□INDUCTANCE VS. DC BIAS CHARACTERISTICS GRAPH

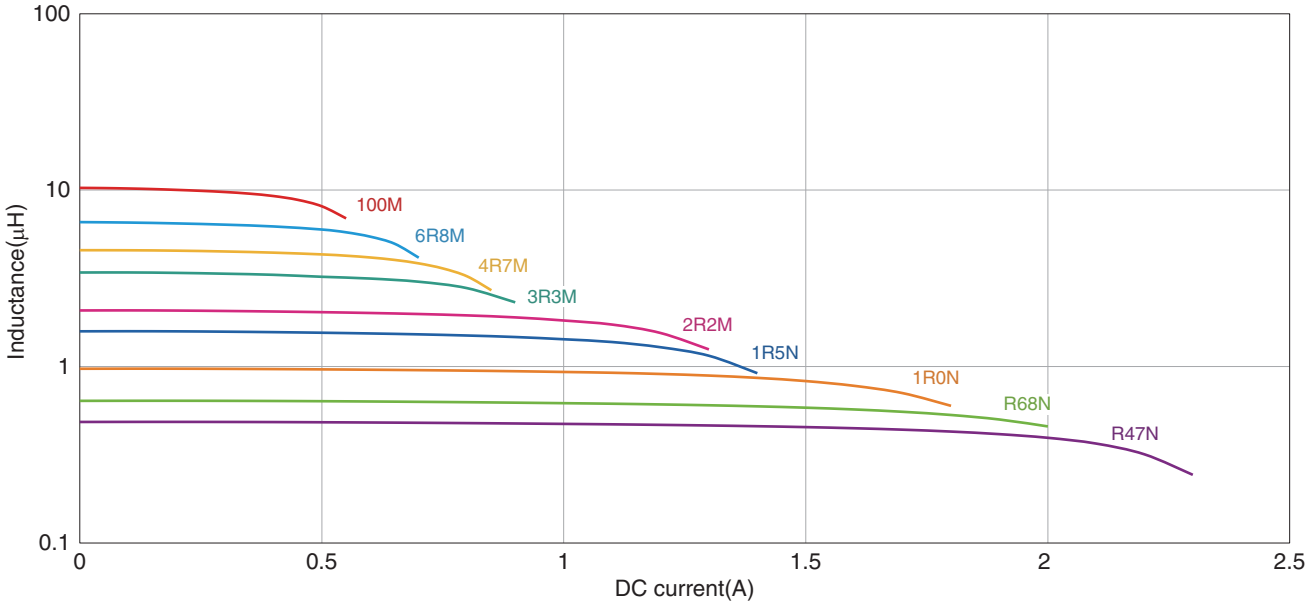

○ Measurement equipment

Product No.	Manufacturer
4285A+42841A+42842C	Agilent Technologies

＊ Equivalent measurement equipment may be used.

VLS-E series

VLS2010E Type



SHAPE & DIMENSIONS

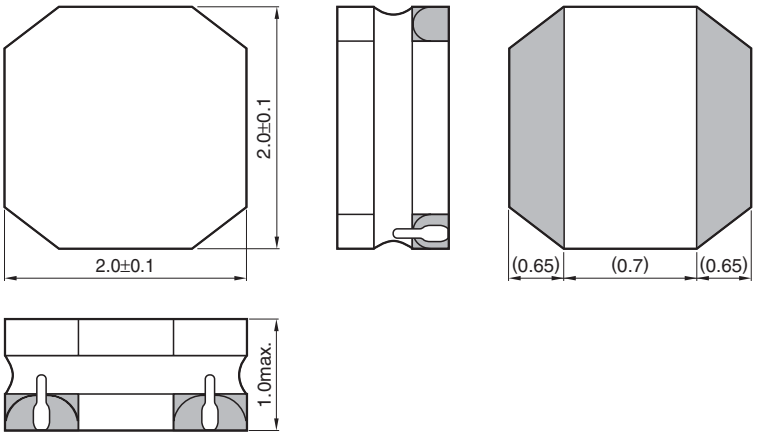

Dimensions in mm

RECOMMENDED LAND PATTERN

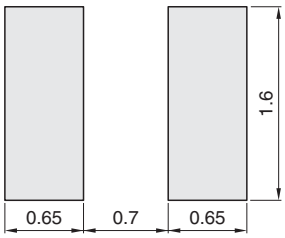

Dimensions in mm

VLS-E series VLS2010E Type

■ELECTRICAL CHARACTERISTICS

□CHARACTERISTICS SPECIFICATION TABLE

L		Measuring frequency (MHz)	DC resistance (Ω)		Rated current*(A)			Part No.
					max.	typ.		
(μH)	Tolerance		max.	typ.	Idc1	Idc1	Idc2	
0.56	±30%	1.0	0.060	0.050	2.00	2.25	2.05	VLS2010ET-R56N
1.0	±30%	1.0	0.108	0.090	1.45	1.65	1.55	VLS2010ET-1R0N
1.5	±30%	1.0	0.156	0.130	1.20	1.30	1.25	VLS2010ET-1R5N
2.2	±20%	1.0	0.228	0.190	1.00	1.10	1.05	VLS2010ET-2R2M
3.3	±20%	1.0	0.348	0.290	0.83	0.93	0.86	VLS2010ET-3R3M
4.7	±20%	1.0	0.408	0.340	0.70	0.78	0.79	VLS2010ET-4R7M
6.8	±20%	1.0	0.648	0.540	0.57	0.64	0.63	VLS2010ET-6R8M
10	±20%	1.0	0.936	0.780	0.47	0.52	0.52	VLS2010ET-100M
15	±20%	1.0	1.476	1.230	0.40	0.44	0.41	VLS2010ET-150M
22	±20%	1.0	2.040	1.700	0.33	0.37	0.35	VLS2010ET-220M

* Rated current: smaller value of either Idc1 or Idc2.
Idc1: When based on the inductance change rate (30% below the nominal value)
Idc2: When based on the temperature increase (Temperature increase of 40°C by self heating)

○ Measurement equipment

Measurement item	Product No.	Manufacturer
L	4194A	Agilent Technologies
DC resistance	VP-2941A	Panasonic
Rated current Idc1	4285A+42841A+42842C	Agilent Technologies

＊ Equivalent measurement equipment may be used.

VLS-E series VLS2010E Type

■ELECTRICAL CHARACTERISTICS

□L FREQUENCY CHARACTERISTICS GRAPH

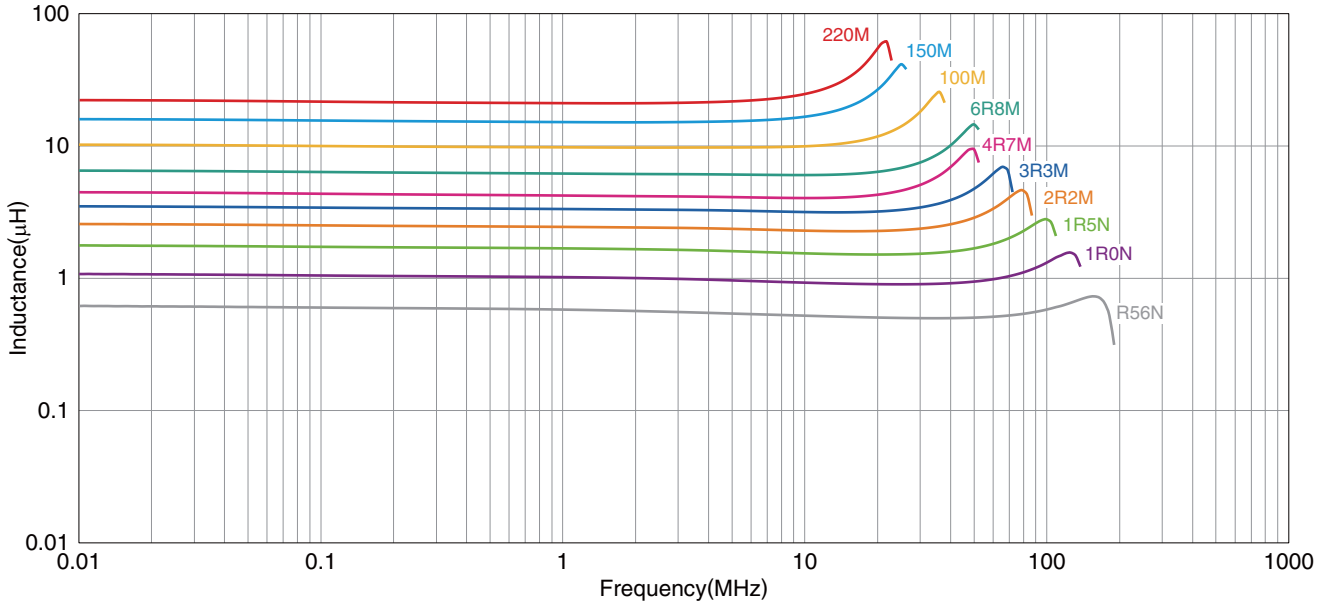

○ Measurement equipment

Product No.	Manufacturer
4294A	Agilent Technologies

＊ Equivalent measurement equipment may be used.

VLS-E series VLS2010E Type

■ELECTRICAL CHARACTERISTICS

□INDUCTANCE VS. DC BIAS CHARACTERISTICS GRAPH

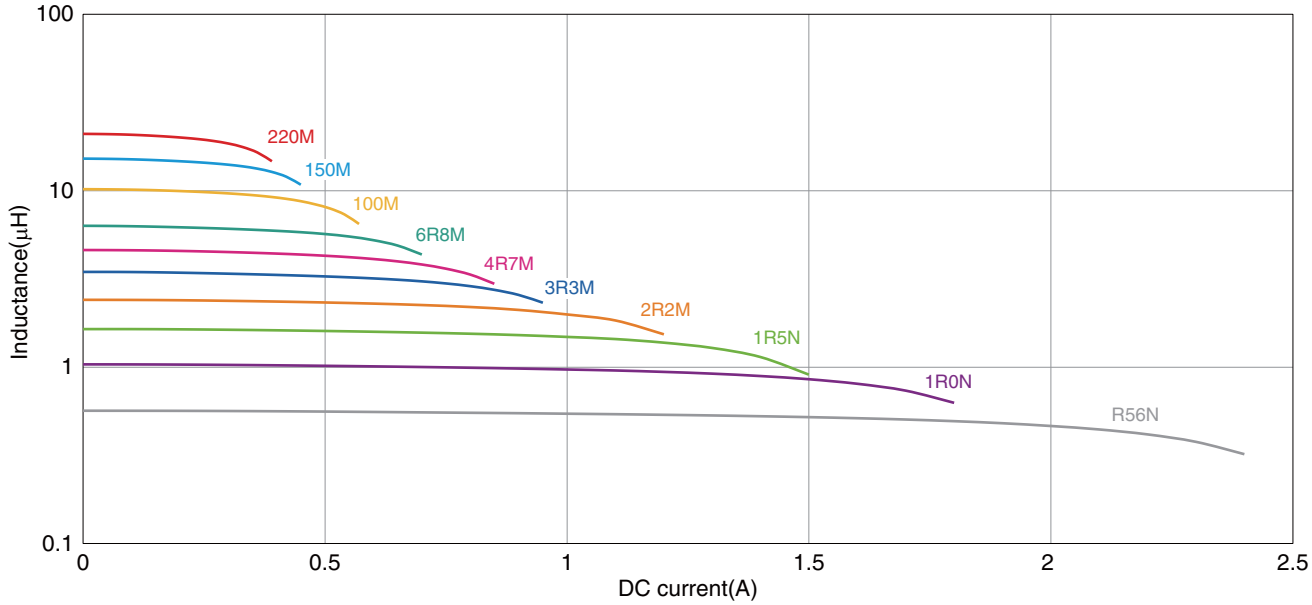

○ Measurement equipment

Product No.	Manufacturer
4285A+42841A+42842C	Agilent Technologies

＊ Equivalent measurement equipment may be used.

VLS-E series

VLS2012E Type



SHAPE & DIMENSIONS

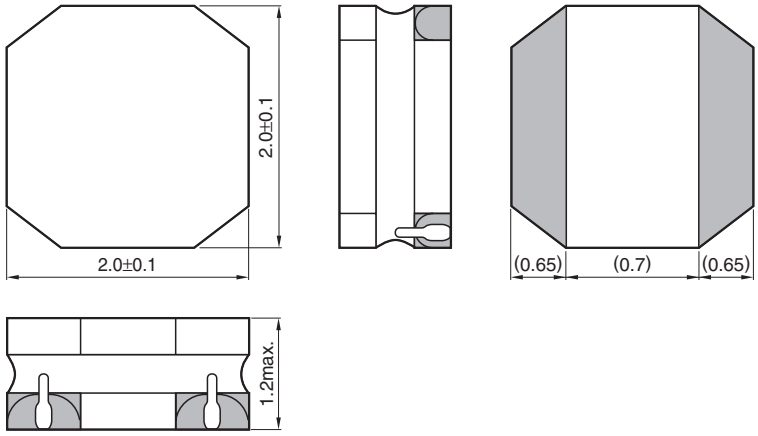

Dimensions in mm

RECOMMENDED LAND PATTERN

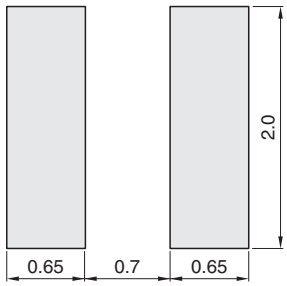

Dimensions in mm

VLS-E series VLS2012E Type

■ELECTRICAL CHARACTERISTICS

□CHARACTERISTICS SPECIFICATION TABLE

L		Measuring frequency (MHz)	DC resistance (Ω)		Rated current*(A)			Part No.
					max.	typ.		
(μH)	Tolerance		max.	typ.	Idc1	Idc1	Idc2	
0.47	±30%	1.0	0.059	0.049	2.05	2.25	2.00	VLS2012ET-R47N
0.68	±30%	1.0	0.066	0.055	1.70	1.90	1.85	VLS2012ET-R68N
1.0	±30%	1.0	0.086	0.071	1.45	1.65	1.65	VLS2012ET-1R0N
1.5	±30%	1.0	0.108	0.090	1.20	1.30	1.45	VLS2012ET-1R5N
2.2	±20%	1.0	0.153	0.127	1.00	1.10	1.25	VLS2012ET-2R2M
3.3	±20%	1.0	0.228	0.190	0.84	0.93	1.00	VLS2012ET-3R3M
4.7	±20%	1.0	0.336	0.280	0.70	0.78	0.84	VLS2012ET-4R7M
6.8	±20%	1.0	0.498	0.415	0.57	0.64	0.69	VLS2012ET-6R8M
10	±20%	1.0	0.834	0.695	0.47	0.52	0.53	VLS2012ET-100M
15	±20%	1.0	1.062	0.885	0.40	0.44	0.47	VLS2012ET-150M
22	±20%	1.0	1.764	1.470	0.33	0.37	0.35	VLS2012ET-220M

* Rated current: smaller value of either Idc1 or Idc2.
Idc1: When based on the inductance change rate (30% below the nominal value)
Idc2: When based on the temperature increase (Temperature increase of 40°C by self heating)

○ Measurement equipment

Measurement item	Product No.	Manufacturer
L	4194A	Agilent Technologies
DC resistance	VP-2941A	Panasonic
Rated current Idc1	4285A+42841A+42842C	Agilent Technologies

＊ Equivalent measurement equipment may be used.

VLS-E series VLS2012E Type

■ELECTRICAL CHARACTERISTICS

□L FREQUENCY CHARACTERISTICS GRAPH

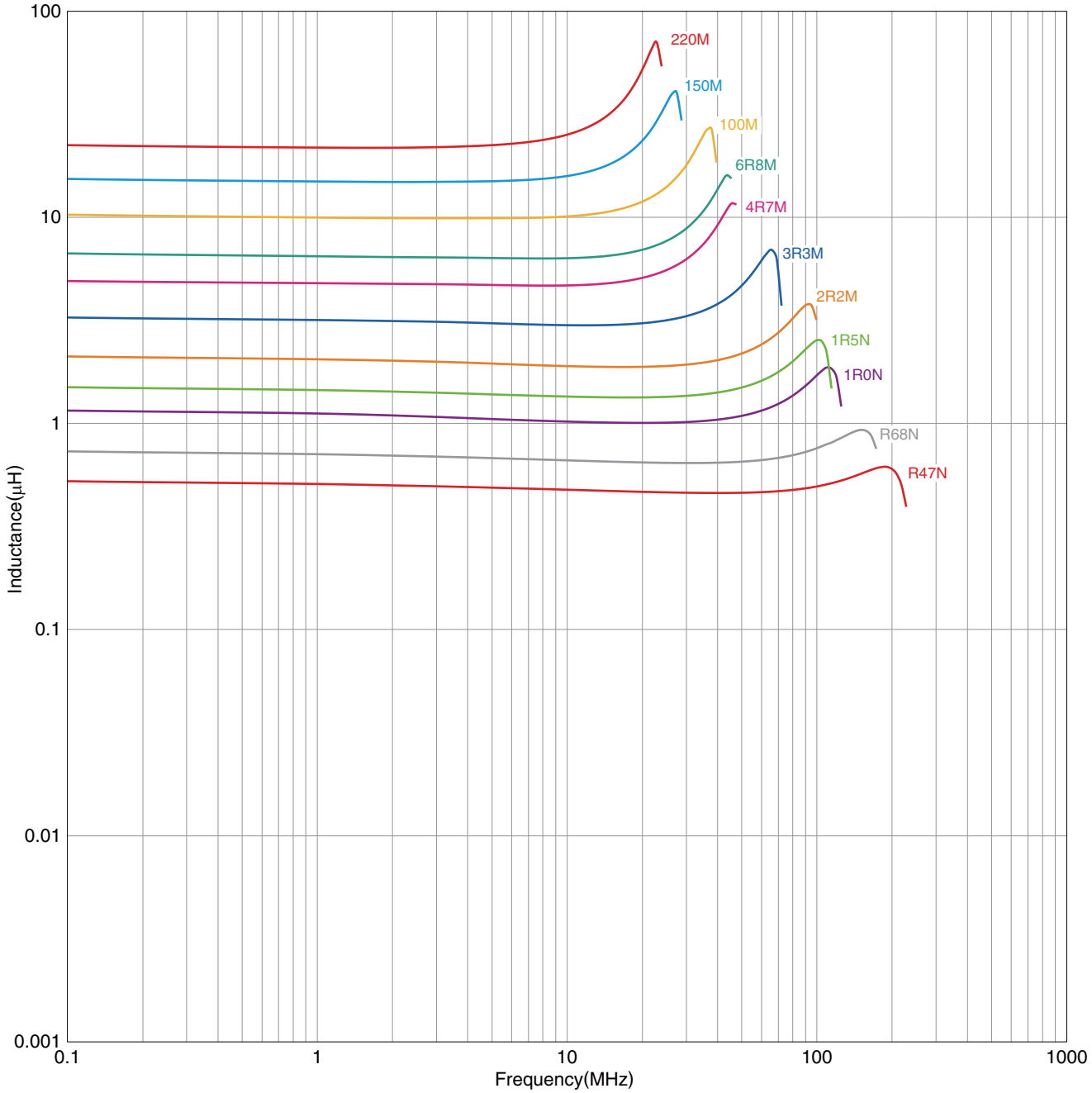

○ Measurement equipment

Product No.	Manufacturer
4294A	Agilent Technologies

＊ Equivalent measurement equipment may be used.

VLS-E series VLS2012EType

■ELECTRICAL CHARACTERISTICS

□INDUCTANCE VS. DC BIAS CHARACTERISTICS GRAPH

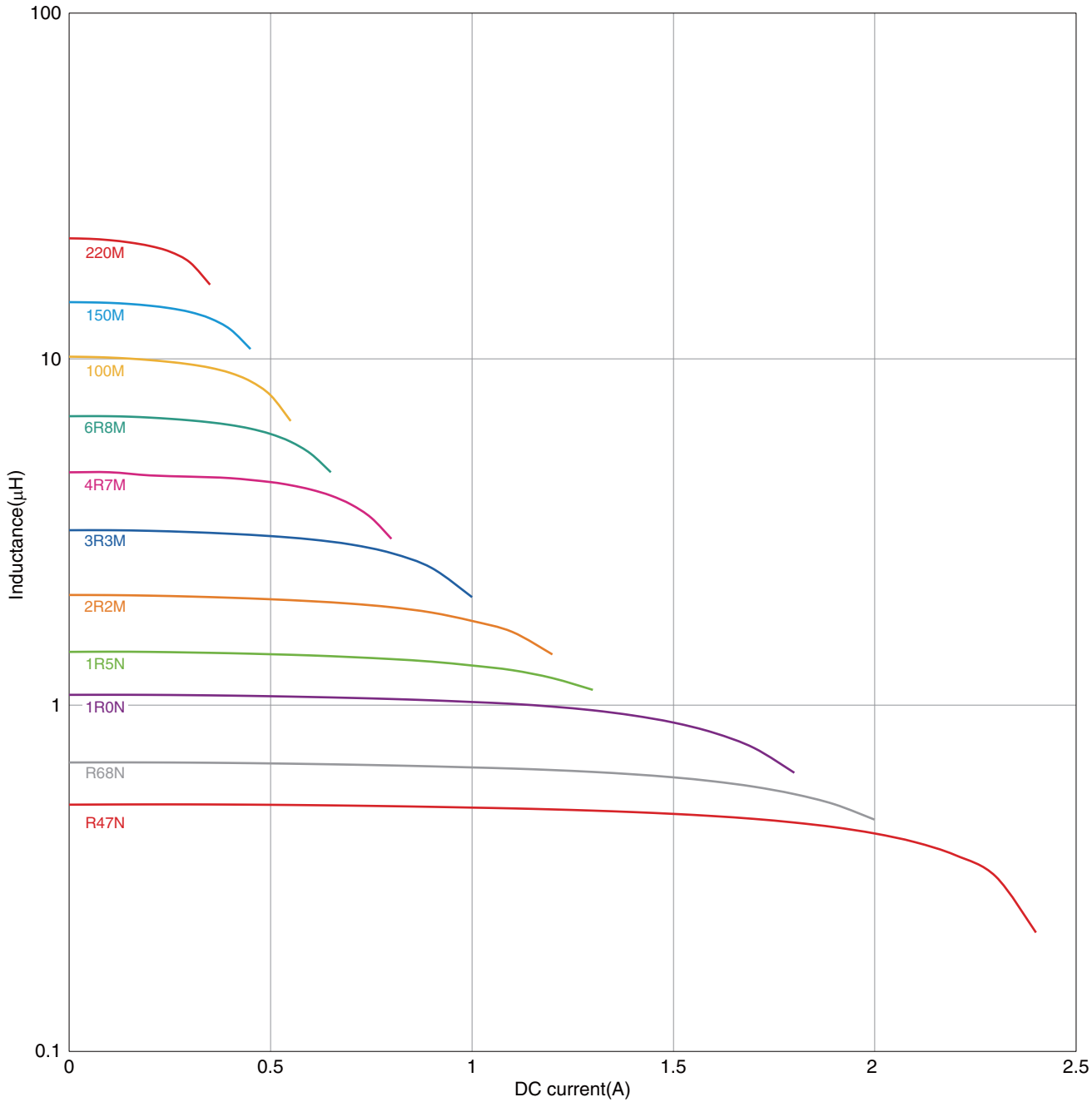

○ Measurement equipment

Product No.	Manufacturer
4285A+42841A+42842C	Agilent Technologies

＊ Equivalent measurement equipment may be used.

VLS-E series

VLS252008E Type



SHAPE & DIMENSIONS

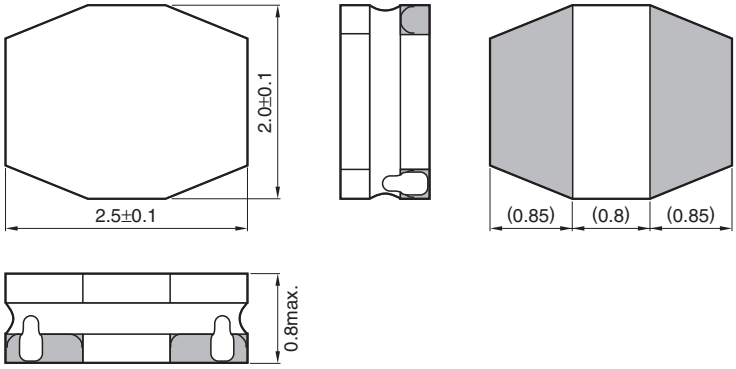

Dimensions in mm

RECOMMENDED LAND PATTERN

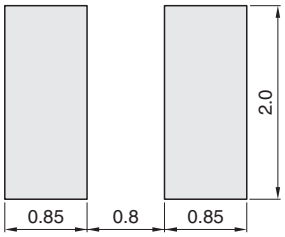

Dimensions in mm

VLS-E series VLS252008E Type

■ELECTRICAL CHARACTERISTICS

□CHARACTERISTICS SPECIFICATION TABLE

L		Measuring frequency	DC resistance (Ω)		Rated current*(A)			Part No.
					max.	typ.		
(μH)	Tolerance	(MHz)	max.	typ.	Idc1	Idc1	Idc2	
0.47	±30%	1.0	0.140	0.116	1.65	1.80	1.20	VLS252008ET-R47N
1.0	±30%	1.0	0.219	0.182	1.20	1.35	0.97	VLS252008ET-1R0N
1.5	±30%	1.0	0.248	0.206	1.00	1.10	0.91	VLS252008ET-1R5N
2.2	±20%	1.0	0.290	0.241	0.77	0.86	0.84	VLS252008ET-2R2M
3.3	±20%	1.0	0.416	0.346	0.73	0.82	0.70	VLS252008ET-3R3M
4.7	±20%	1.0	0.580	0.483	0.61	0.68	0.59	VLS252008ET-4R7M
6.8	±20%	1.0	0.818	0.681	0.49	0.55	0.50	VLS252008ET-6R8M
10.0	±20%	1.0	1.232	1.026	0.43	0.48	0.41	VLS252008ET-100M

* Rated current: smaller value of either Idc1 or Idc2.
Idc1: When based on the inductance change rate (30% below the nominal value)
Idc2: When based on the temperature increase (Temperature increase of 40°C by self heating)

○ Measurement equipment

Measurement item	Product No.	Manufacturer
L	4194A	Agilent Technologies
DC resistance	VP-2941A	Panasonic
Rated current Idc1	4285A+42841A+42842C	Agilent Technologies

＊ Equivalent measurement equipment may be used.

VLS-E series VLS252008E Type

■ELECTRICAL CHARACTERISTICS

□L FREQUENCY CHARACTERISTICS GRAPH

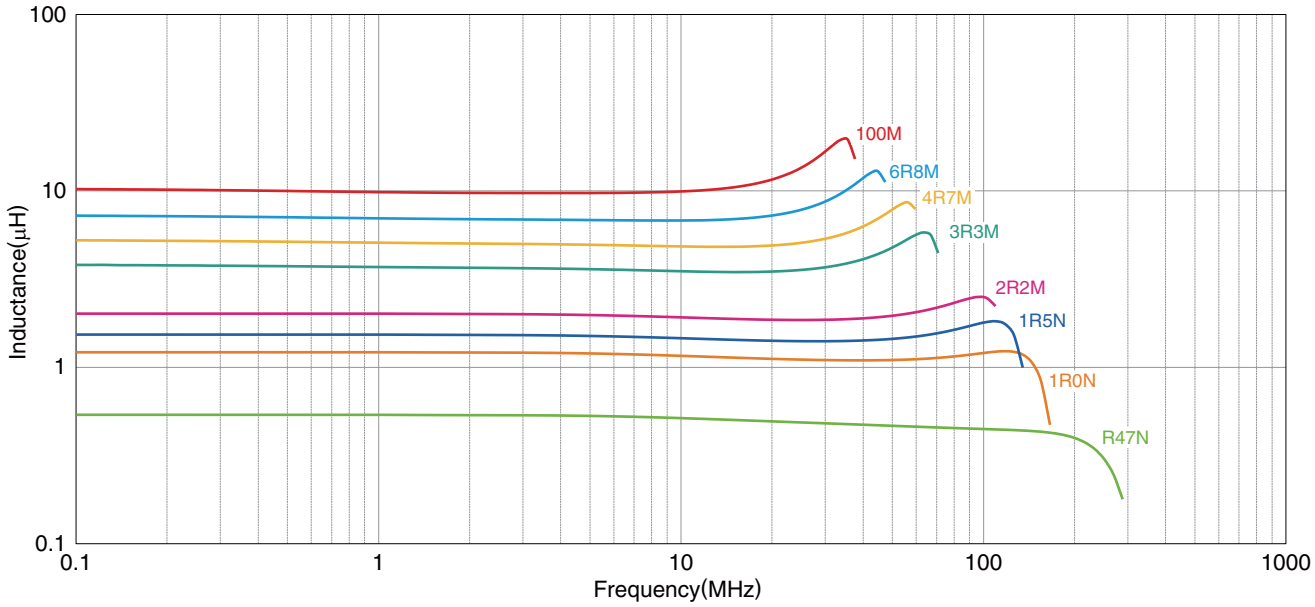

○ Measurement equipment

Product No.	Manufacturer
4294A	Agilent Technologies

＊ Equivalent measurement equipment may be used.

VLS-E series VLS252008E Type

■ELECTRICAL CHARACTERISTICS

□INDUCTANCE VS. DC BIAS CHARACTERISTICS GRAPH

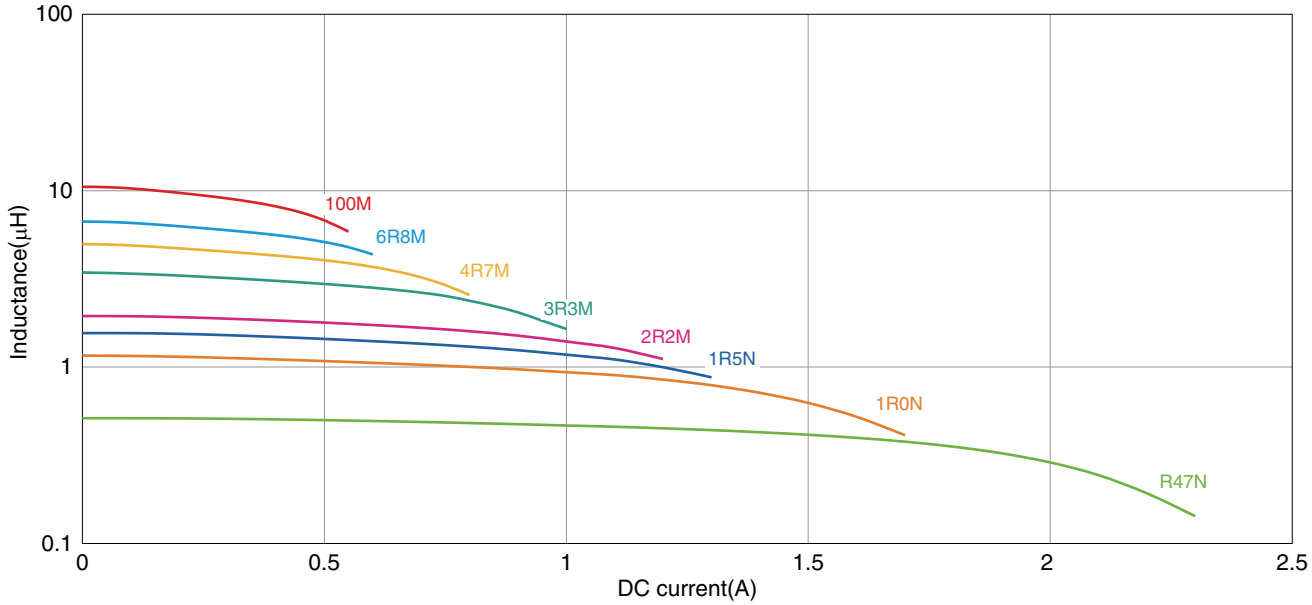

○ Measurement equipment

Product No.	Manufacturer
4285A+42841A+42842C	Agilent Technologies

＊ Equivalent measurement equipment may be used.

VLS-E series

VLS252010E Type



SHAPE & DIMENSIONS

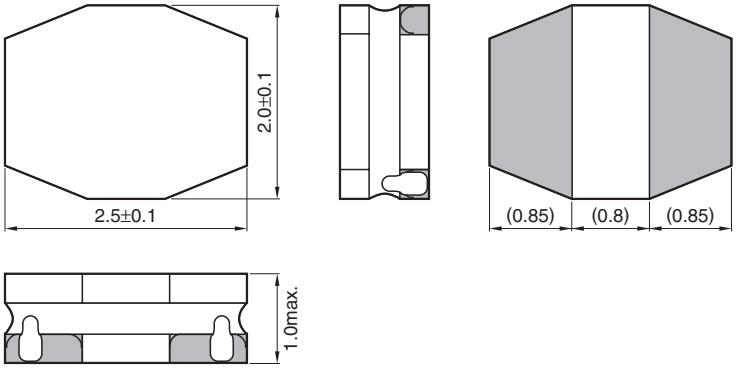

Dimensions in mm

RECOMMENDED LAND PATTERN

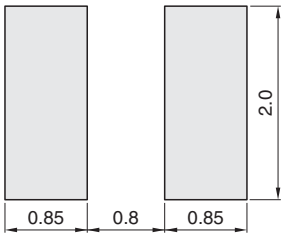

Dimensions in mm

VLS-E series VLS252010E Type

■ELECTRICAL CHARACTERISTICS

□CHARACTERISTICS SPECIFICATION TABLE

L		Measuring frequency (MHz)	DC resistance (Ω)		Rated current*(A)			Part No.
					max.	typ.		
(μH)	Tolerance		max.	typ.	Idc1	Idc1	Idc2	
0.47	±30%	1.0	0.046	0.038	2.50	2.80	2.65	VLS252010ET-R47N
0.68	±30%	1.0	0.062	0.052	2.05	2.30	2.20	VLS252010ET-R68N
1.0	±30%	1.0	0.084	0.070	1.75	1.90	1.90	VLS252010ET-1R0N
1.5	±30%	1.0	0.128	0.107	1.45	1.60	1.50	VLS252010ET-1R5N
2.2	±20%	1.0	0.190	0.158	1.20	1.30	1.20	VLS252010ET-2R2M
3.3	±20%	1.0	0.275	0.229	0.94	1.05	1.00	VLS252010ET-3R3M
4.7	±20%	1.0	0.398	0.332	0.80	0.89	0.82	VLS252010ET-4R7M
6.8	±20%	1.0	0.532	0.443	0.68	0.76	0.71	VLS252010ET-6R8M
10	±20%	1.0	0.854	0.712	0.56	0.63	0.55	VLS252010ET-100M

* Rated current: smaller value of either Idc1 or Idc2.
Idc1: When based on the inductance change rate (30% below the nominal value)
Idc2: When based on the temperature increase (Temperature increase of 40°C by self heating)

○ Measurement equipment

Measurement item	Product No.	Manufacturer
L	4194A	Agilent Technologies
DC resistance	VP-2941A	Panasonic
Rated current Idc1	4285A+42841A+42842C	Agilent Technologies

＊ Equivalent measurement equipment may be used.

VLS-E series VLS252010E Type

■ELECTRICAL CHARACTERISTICS

□L FREQUENCY CHARACTERISTICS GRAPH

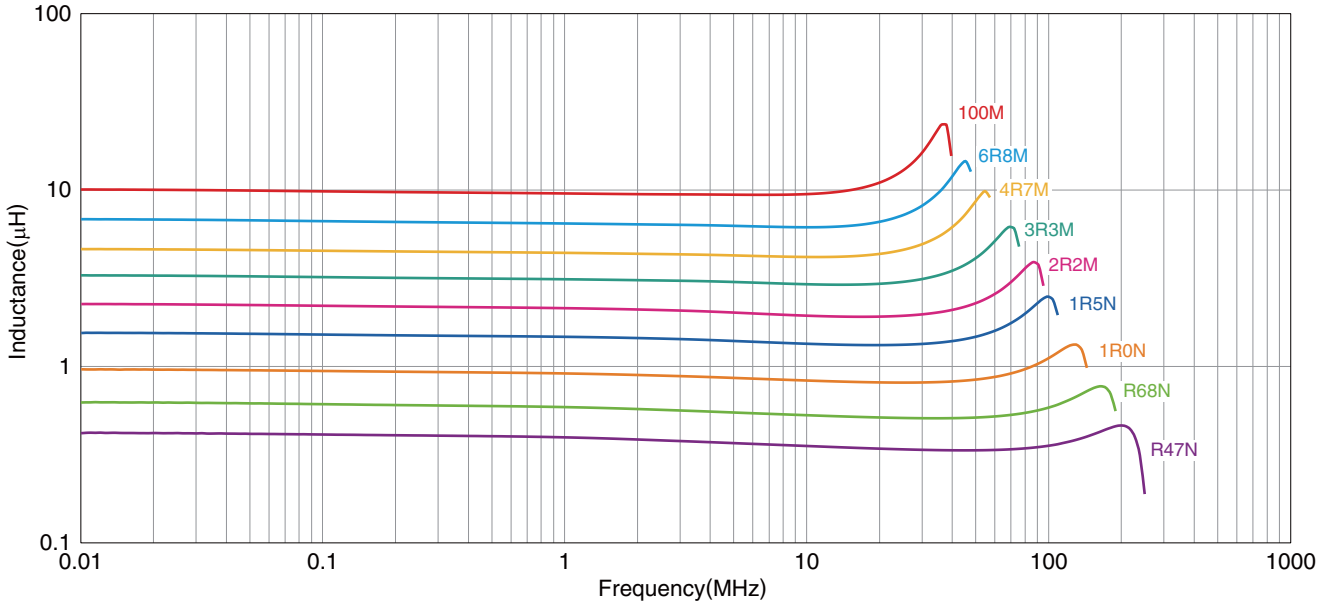

○ Measurement equipment

Product No.	Manufacturer
4294A	Agilent Technologies

＊ Equivalent measurement equipment may be used.

VLS-E series VLS252010E Type

■ELECTRICAL CHARACTERISTICS

□INDUCTANCE VS. DC BIAS CHARACTERISTICS GRAPH

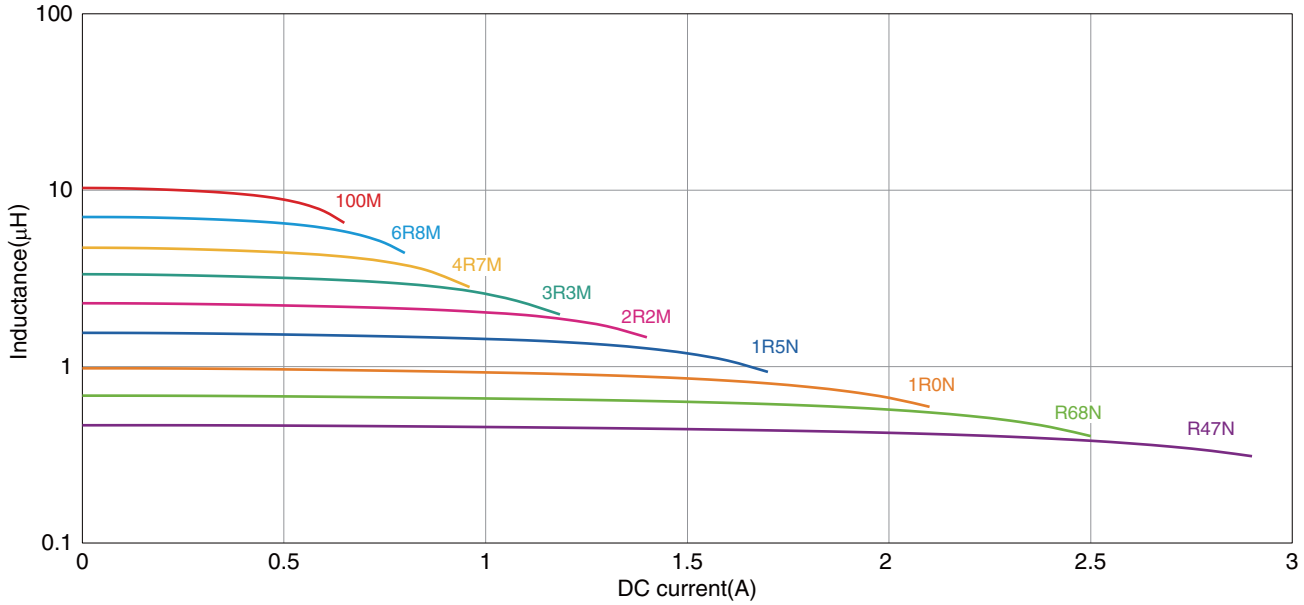

○ Measurement equipment

Product No.	Manufacturer
4285A+42841A+42842C	Agilent Technologies

＊ Equivalent measurement equipment may be used.

VLS-E series

VLS252012E Type



SHAPE & DIMENSIONS

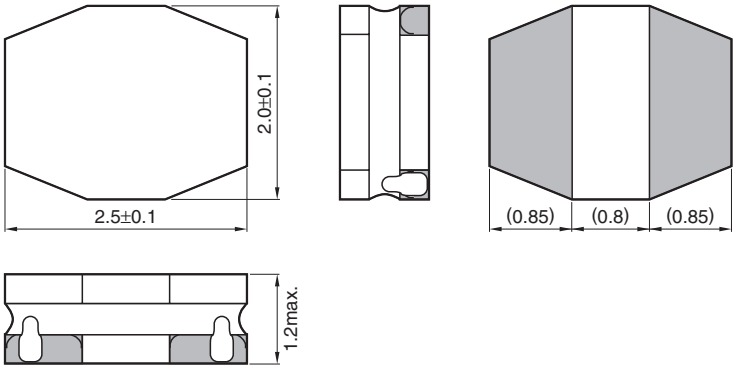

Dimensions in mm

RECOMMENDED LAND PATTERN

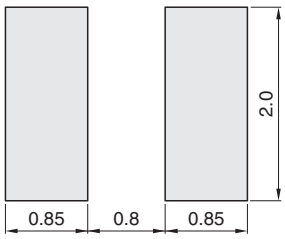

Dimensions in mm

VLS-E series VLS252012E Type

■ELECTRICAL CHARACTERISTICS

□CHARACTERISTICS SPECIFICATION TABLE

L		Measuring frequency (MHz)	DC resistance (Ω)		Rated current*(A)			Part No.
					max.	typ.		
(μH)	Tolerance		max.	typ.	Idc1	Idc1	Idc2	
0.47	±30%	1.0	0.056	0.047	2.75	3.10	2.15	VLS252012ET-R47N
1.0	±30%	1.0	0.087	0.073	2.20	2.45	1.70	VLS252012ET-1R0N
1.5	±30%	1.0	0.126	0.105	1.80	2.00	1.45	VLS252012ET-1R5N
2.2	±20%	1.0	0.154	0.129	1.55	1.75	1.30	VLS252012ET-2R2M
3.3	±20%	1.0	0.272	0.227	1.25	1.40	0.98	VLS252012ET-3R3M
4.7	±20%	1.0	0.405	0.338	1.05	1.20	0.81	VLS252012ET-4R7M
6.8	±20%	1.0	0.612	0.510	0.85	0.95	0.65	VLS252012ET-6R8M
10	±20%	1.0	0.756	0.630	0.73	0.82	0.59	VLS252012ET-100M

* Rated current: smaller value of either Idc1 or Idc2.
Idc1: When based on the inductance change rate (30% below the nominal value)
Idc2: When based on the temperature increase (Temperature increase of 40°C by self heating)

○ Measurement equipment

Measurement item	Product No.	Manufacturer
L	4194A	Agilent Technologies
DC resistance	VP-2941A	Panasonic
Rated current Idc1	4285A+42841A+42842C	Agilent Technologies

＊ Equivalent measurement equipment may be used.

VLS-E series VLS252012E Type

■ELECTRICAL CHARACTERISTICS

□L FREQUENCY CHARACTERISTICS GRAPH

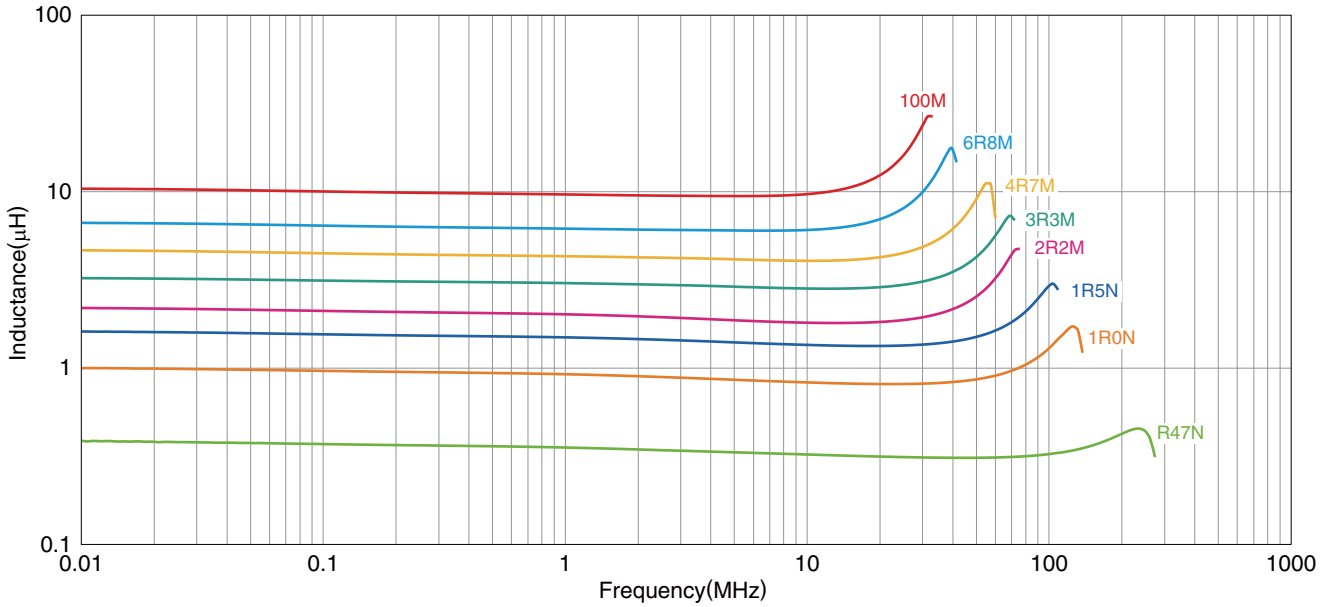

○ Measurement equipment

Product No.	Manufacturer
4294A	Agilent Technologies

＊ Equivalent measurement equipment may be used.

VLS-E series VLS252012E Type

■ELECTRICAL CHARACTERISTICS

□INDUCTANCE VS. DC BIAS CHARACTERISTICS GRAPH

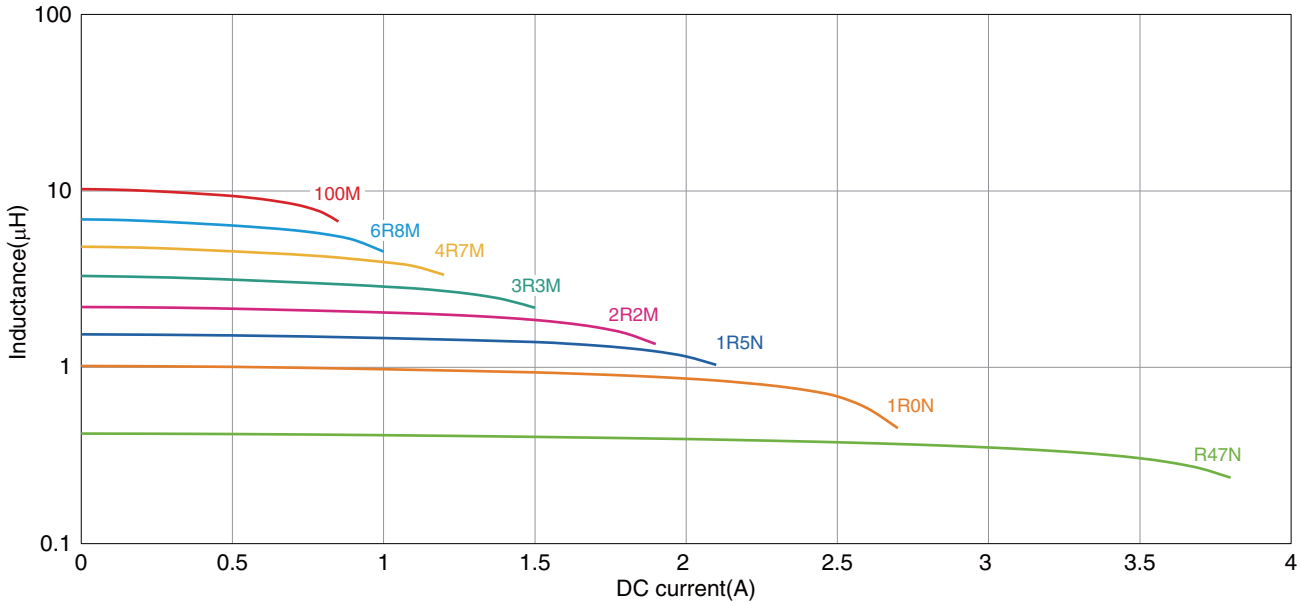

○ Measurement equipment

Product No.	Manufacturer
4285A+42841A+42842C	Agilent Technologies

＊ Equivalent measurement equipment may be used.

VLS-E series

VLS252015E Type



SHAPE & DIMENSIONS

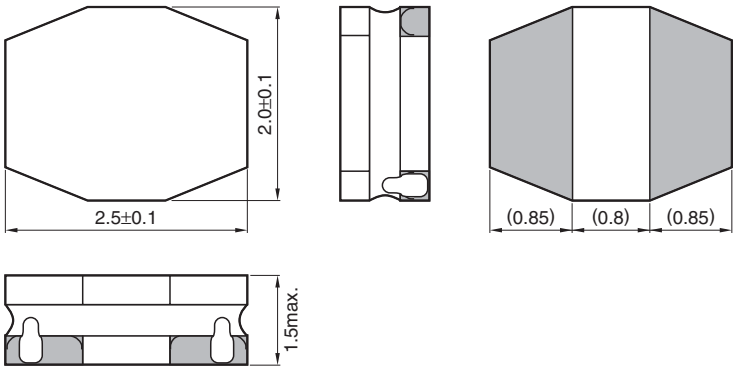

Dimensions in mm

RECOMMENDED LAND PATTERN

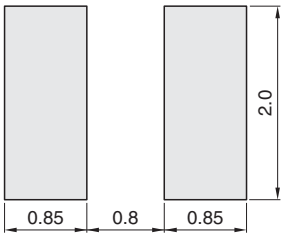

Dimensions in mm

VLS-E series VLS252015E Type

■ELECTRICAL CHARACTERISTICS

□CHARACTERISTICS SPECIFICATION TABLE

L		Measuring frequency (MHz)	DC resistance (Ω)		Rated current*(A)			Part No.
					max.	typ.		
(μH)	Tolerance		max.	typ.	Idc1	Idc1	Idc2	
1.0	±30%	1.0	0.082	0.068	1.95	2.20	1.75	VLS252015ET-1R0N
1.5	±30%	1.0	0.120	0.100	1.75	1.95	1.45	VLS252015ET-1R5N
2.2	±20%	1.0	0.160	0.133	1.50	1.70	1.25	VLS252015ET-2R2M
3.3	±20%	1.0	0.219	0.182	1.20	1.35	1.05	VLS252015ET-3R3M
4.7	±20%	1.0	0.318	0.265	1.00	1.15	0.89	VLS252015ET-4R7M
6.8	±20%	1.0	0.480	0.400	0.85	0.95	0.73	VLS252015ET-6R8M
10	±20%	1.0	0.588	0.490	0.72	0.80	0.66	VLS252015ET-100M

* Rated current: smaller value of either Idc1 or Idc2.
Idc1: When based on the inductance change rate (30% below the nominal value)
Idc2: When based on the temperature increase (Temperature increase of 40°C by self heating)

○ Measurement equipment

Measurement item	Product No.	Manufacturer
L	4194A	Agilent Technologies
DC resistance	VP-2941A	Panasonic
Rated current Idc1	4285A+42841A+42842C	Agilent Technologies

＊ Equivalent measurement equipment may be used.

VLS-E series VLS252015E Type

■ELECTRICAL CHARACTERISTICS

□L FREQUENCY CHARACTERISTICS GRAPH

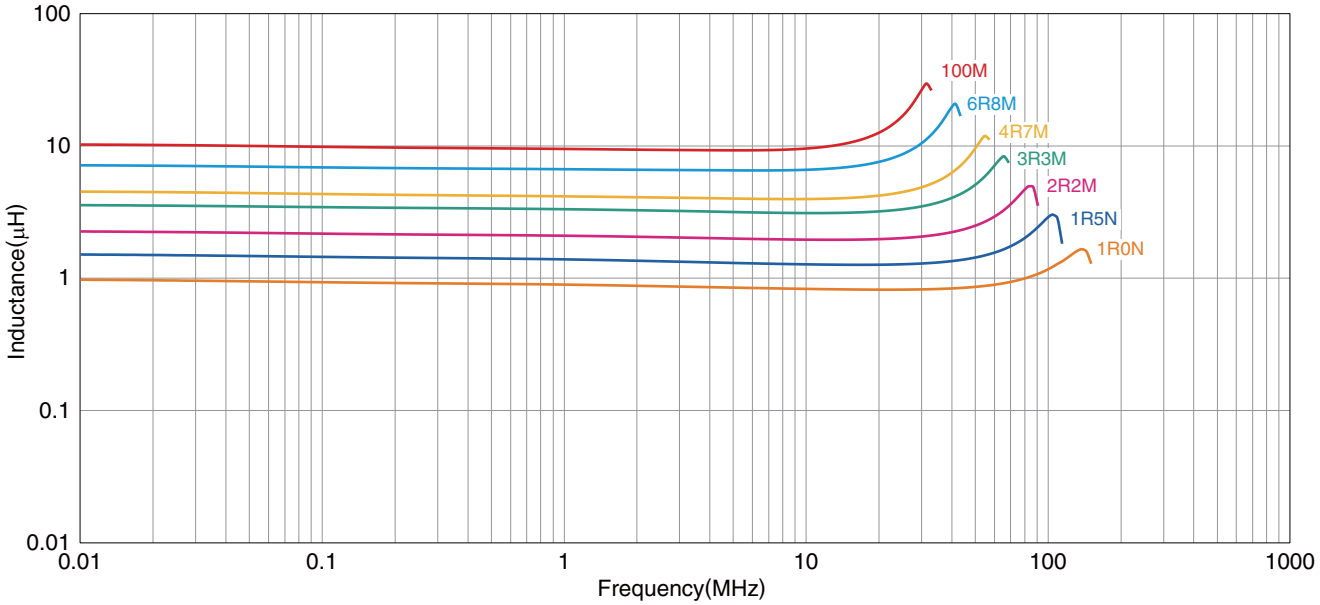

○ Measurement equipment

Product No.	Manufacturer
4294A	Agilent Technologies

＊ Equivalent measurement equipment may be used.

VLS-E series VLS252015E Type

■ELECTRICAL CHARACTERISTICS

□INDUCTANCE VS. DC BIAS CHARACTERISTICS GRAPH

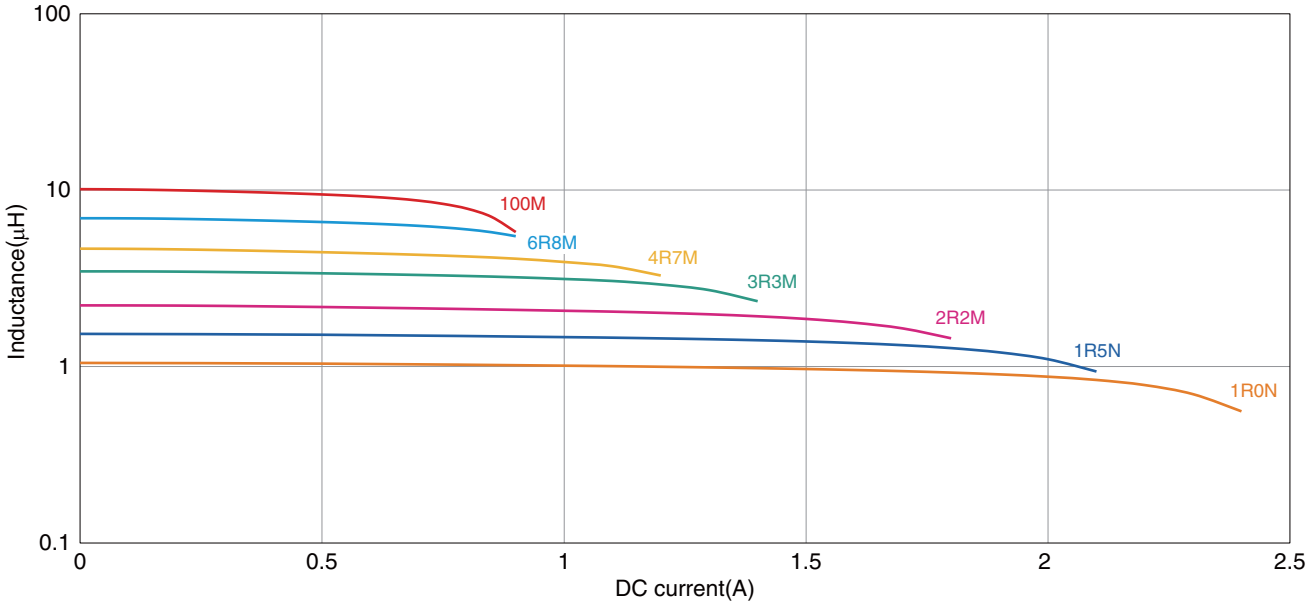

○ Measurement equipment

Product No.	Manufacturer
4285A+42841A+42842C	Agilent Technologies

＊ Equivalent measurement equipment may be used.

VLS-E series

VLS3010E Type



SHAPE & DIMENSIONS

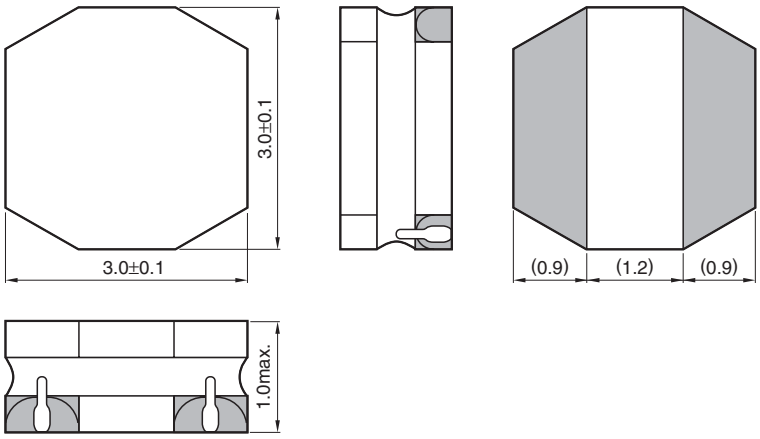

Dimensions in mm

RECOMMENDED LAND PATTERN

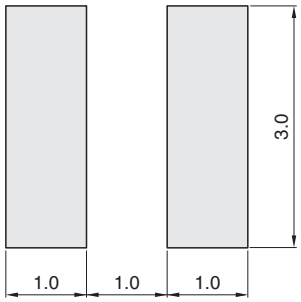

Dimensions in mm

VLS-E series VLS3010E Type

■ELECTRICAL CHARACTERISTICS

□CHARACTERISTICS SPECIFICATION TABLE

L		Measuring frequency (MHz)	DC resistance (Ω)		Rated current*(A)			Part No.
					max.	typ.		
(μH)	tolerance		max.	typ.	Idc1	Idc1	Idc2	
1.0	±30%	1.0	0.072	0.060	1.60	1.80	2.10	VLS3010ET-1R0N
1.5	±30%	1.0	0.085	0.071	1.35	1.50	1.90	VLS3010ET-1R5N
2.2	±20%	1.0	0.116	0.097	1.20	1.30	1.70	VLS3010ET-2R2M
3.3	±20%	1.0	0.156	0.130	1.00	1.10	1.50	VLS3010ET-3R3M
4.7	±20%	1.0	0.204	0.170	0.81	0.90	1.30	VLS3010ET-4R7M
6.8	±20%	1.0	0.312	0.260	0.69	0.77	1.00	VLS3010ET-6R8M
10	±20%	1.0	0.468	0.390	0.56	0.63	0.80	VLS3010ET-100M
15	±20%	1.0	0.612	0.510	0.48	0.54	0.70	VLS3010ET-150M
22	±20%	1.0	0.900	0.750	0.38	0.43	0.60	VLS3010ET-220M

* Rated current: smaller value of either Idc1 or Idc2.
Idc1: When based on the inductance change rate (30% below the nominal value)
Idc2: When based on the temperature increase (Temperature increase of 40°C by self heating)

○ Measurement equipment

Measurement item	Product No.	Manufacturer
L	4194A	Agilent Technologies
DC resistance	VP-2941A	Panasonic
Rated current Idc1	4285A+42841A+42842C	Agilent Technologies

＊ Equivalent measurement equipment may be used.

VLS-E series VLS3010E Type

■ELECTRICAL CHARACTERISTICS

□L FREQUENCY CHARACTERISTICS GRAPH

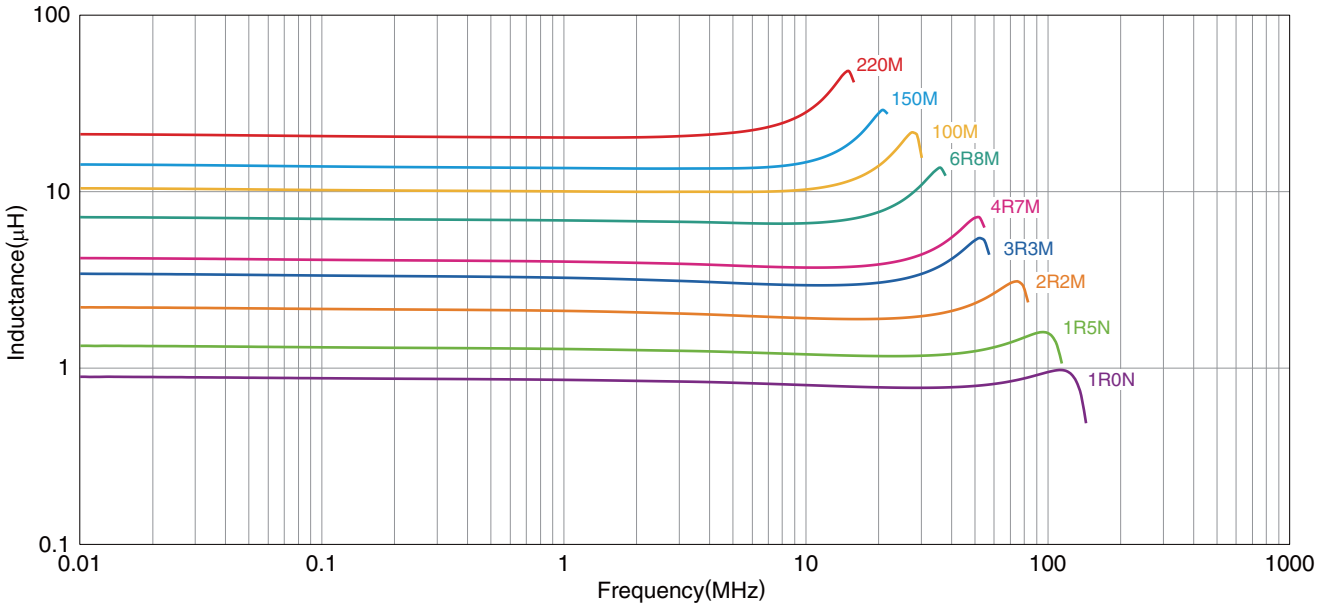

○ Measurement equipment

Product No.	Manufacturer
4294A	Agilent Technologies

＊ Equivalent measurement equipment may be used.

VLS-E series VLS3010E Type

■ELECTRICAL CHARACTERISTICS

□INDUCTANCE VS. DC BIAS CHARACTERISTICS GRAPH

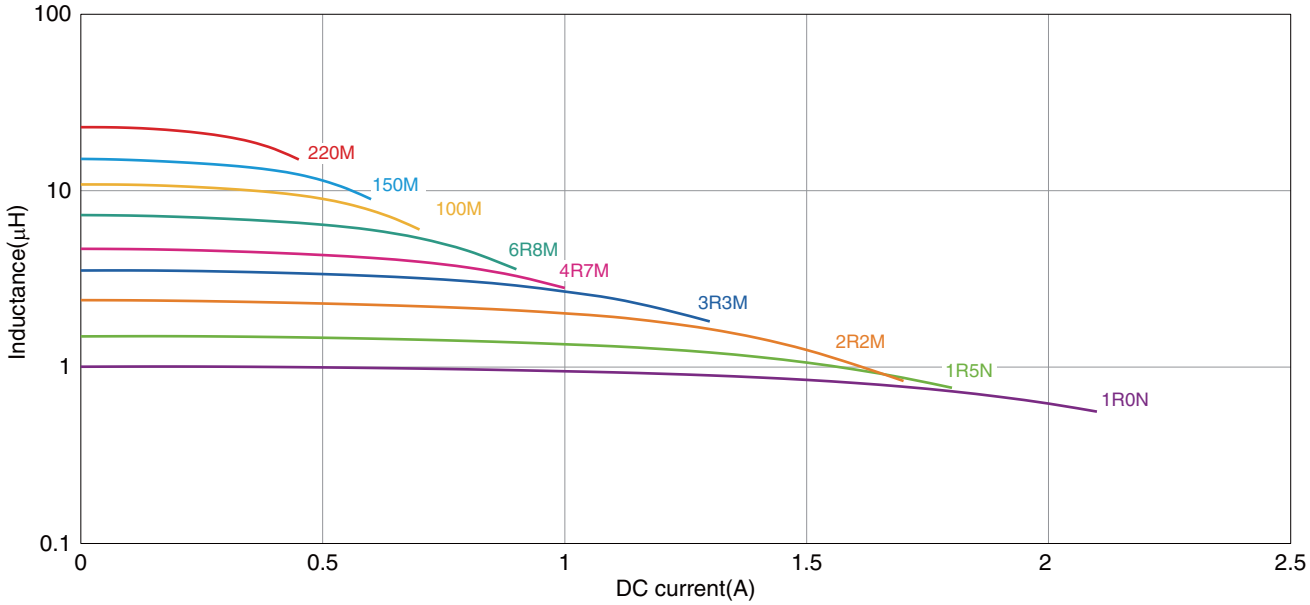

○ Measurement equipment

Product No.	Manufacturer
4285A+42841A+42842C	Agilent Technologies

＊ Equivalent measurement equipment may be used.

VLS-E series

VLS3012E Type



SHAPE & DIMENSIONS

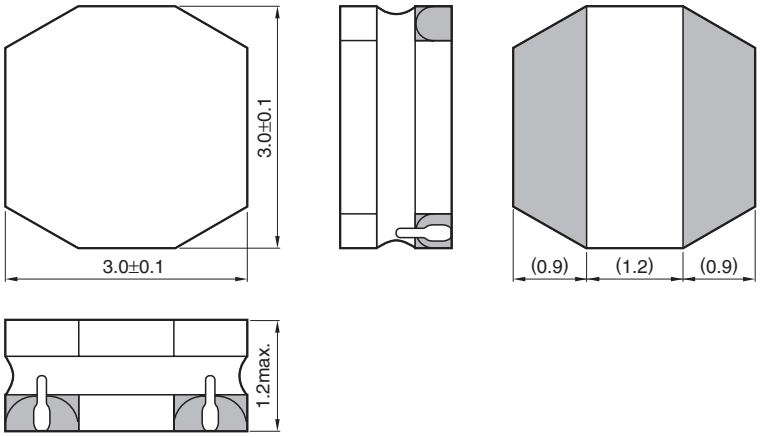

Dimensions in mm

RECOMMENDED LAND PATTERN

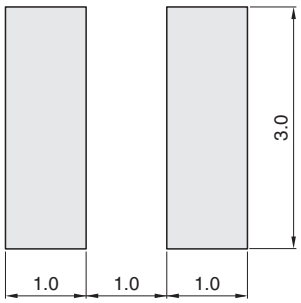

Dimensions in mm

VLS-E series VLS3012E Type

■ELECTRICAL CHARACTERISTICS

□CHARACTERISTICS SPECIFICATION TABLE

L		Measuring frequency (MHz)	DC resistance (Ω)		Rated current*(A)			Part No.
					max.	typ.		
(μH)	Tolerance		max.	typ.	Idc1	Idc1	Idc2	
1.0	±30%	1.0	0.068	0.056	1.90	2.15	2.00	VLS3012ET-1R0N
1.5	±30%	1.0	0.076	0.063	1.50	1.70	1.85	VLS3012ET-1R5N
2.2	±20%	1.0	0.096	0.080	1.35	1.50	1.70	VLS3012ET-2R2M
3.3	±20%	1.0	0.120	0.100	1.05	1.20	1.55	VLS3012ET-3R3M
4.7	±20%	1.0	0.156	0.130	0.95	1.05	1.30	VLS3012ET-4R7M
6.8	±20%	1.0	0.228	0.190	0.81	0.90	1.05	VLS3012ET-6R8M
10	±20%	1.0	0.336	0.280	0.64	0.76	0.89	VLS3012ET-100M
15	±20%	1.0	0.516	0.430	0.55	0.62	0.74	VLS3012ET-150M
22	±20%	1.0	0.756	0.630	0.44	0.49	0.61	VLS3012ET-220M
33	±20%	1.0	1.248	1.040	0.37	0.41	0.48	VLS3012ET-330M
47	±20%	1.0	1.500	1.250	0.31	0.35	0.44	VLS3012ET-470M

* Rated current: smaller value of either Idc1 or Idc2.
Idc1: When based on the inductance change rate (30% below the nominal value)
Idc2: When based on the temperature increase (Temperature increase of 40°C by self heating)

○ Measurement equipment

Measurement item	Product No.	Manufacturer
L	4194A	Agilent Technologies
DC resistance	VP-2941A	Panasonic
Rated current Idc1	4285A+42841A+42842C	Agilent Technologies

＊ Equivalent measurement equipment may be used.

VLS-E series VLS3012E Type

■ELECTRICAL CHARACTERISTICS

□L FREQUENCY CHARACTERISTICS GRAPH

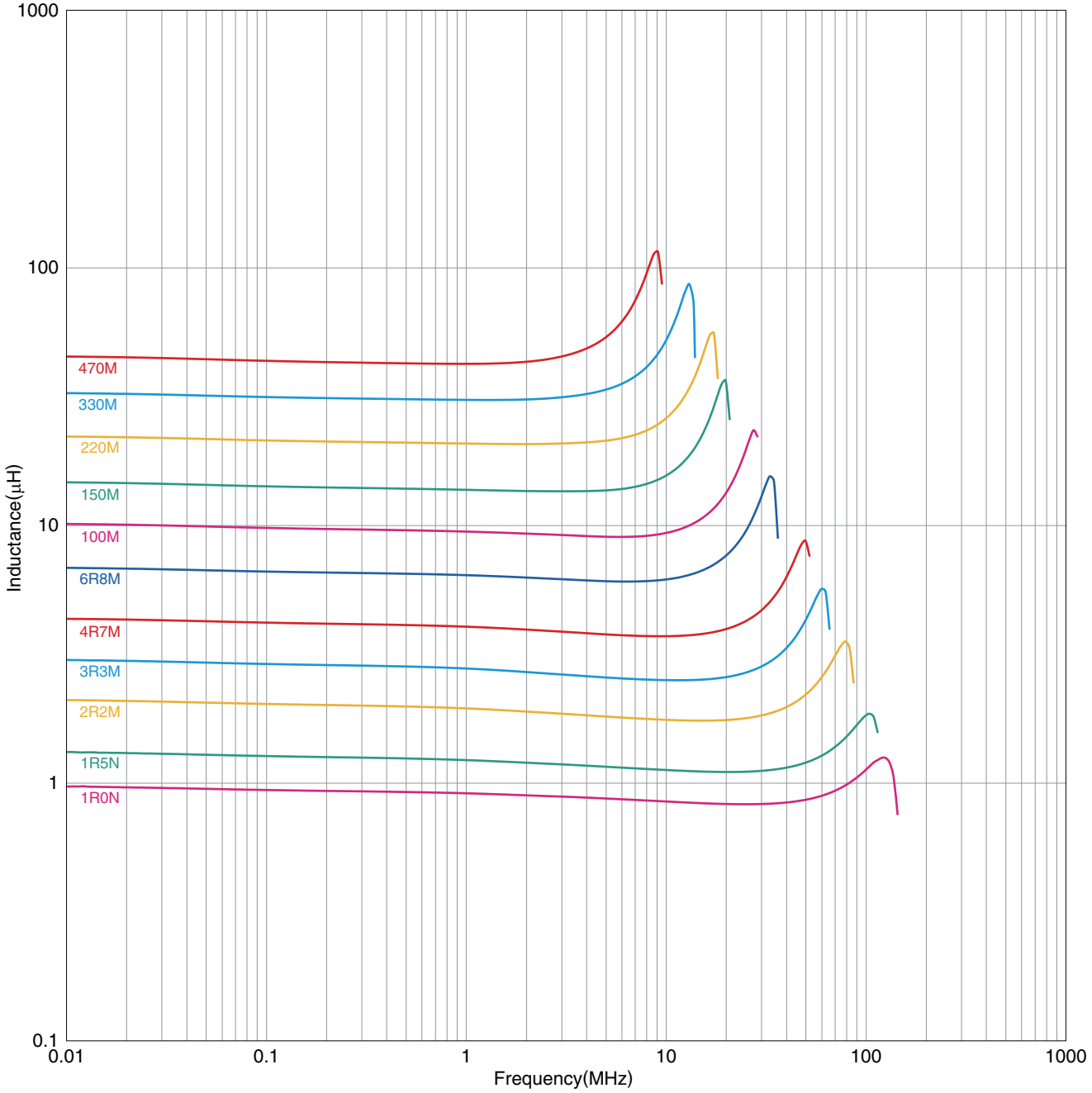

○ Measurement equipment

Product No.	Manufacturer
4294A	Agilent Technologies

＊ Equivalent measurement equipment may be used.

VLS-E series VLS3012E Type

■ELECTRICAL CHARACTERISTICS

□INDUCTANCE VS. DC BIAS CHARACTERISTICS GRAPH

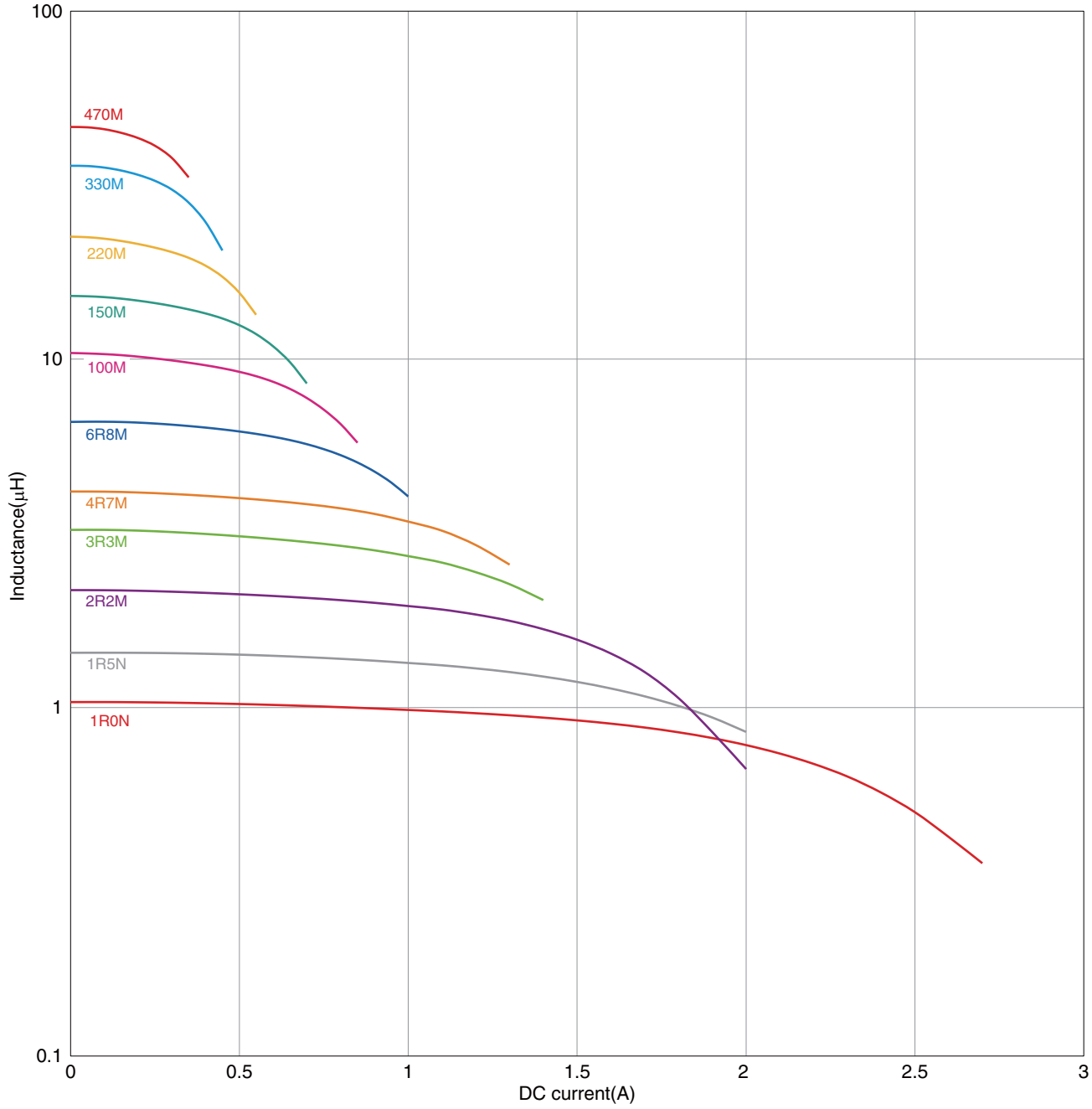

○ Measurement equipment

Product No.	Manufacturer
4285A+42841A+42842C	Agilent Technologies

＊ Equivalent measurement equipment may be used.

VLS-E series

VLS3015E Type



SHAPE & DIMENSIONS

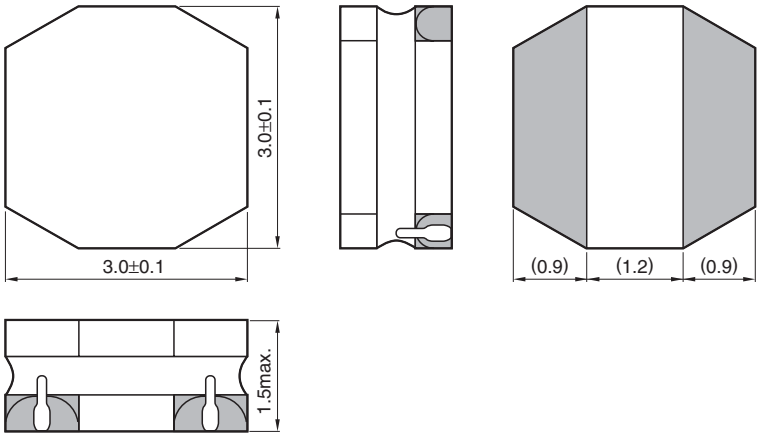

Dimensions in mm

RECOMMENDED LAND PATTERN

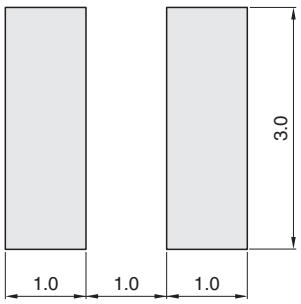

Dimensions in mm

VLS-E series VLS3015E Type

■ELECTRICAL CHARACTERISTICS

□CHARACTERISTICS SPECIFICATION TABLE

L		Measuring frequency	DC resistance (Ω)		Rated current*(A)			Part No.
					max.	typ.		
(μH)	tolerance	(MHz)	max.	typ.	Idc1	Idc1	Idc2	
1.0	±30%	1.0	0.058	0.048	2.00	2.20	2.10	VLS3015ET-1R0N
1.5	±30%	1.0	0.075	0.062	1.50	1.70	1.85	VLS3015ET-1R5N
2.2	±20%	1.0	0.084	0.070	1.35	1.50	1.75	VLS3015ET-2R2M
3.3	±20%	1.0	0.112	0.093	1.15	1.30	1.50	VLS3015ET-3R3M
4.7	±20%	1.0	0.136	0.113	1.00	1.10	1.35	VLS3015ET-4R7M
6.8	±20%	1.0	0.216	0.180	0.92	1.00	1.05	VLS3015ET-6R8M
10	±20%	1.0	0.288	0.240	0.70	0.78	0.94	VLS3015ET-100M
15	±20%	1.0	0.456	0.380	0.58	0.65	0.75	VLS3015ET-150M
22	±20%	1.0	0.660	0.550	0.48	0.54	0.62	VLS3015ET-220M
33	±20%	1.0	0.984	0.820	0.39	0.43	0.51	VLS3015ET-330M
47	±20%	1.0	1.500	1.250	0.32	0.35	0.41	VLS3015ET-470M

* Rated current: smaller value of either Idc1 or Idc2.
Idc1: When based on the inductance change rate (30% below the nominal value)
Idc2: When based on the temperature increase (Temperature increase of 40°C by self heating)

○ Measurement equipment

Measurement item	Product No.	Manufacturer
L	4194A	Agilent Technologies
DC resistance	VP-2941A	Panasonic
Rated current Idc1	4285A+42841A+42842C	Agilent Technologies

＊ Equivalent measurement equipment may be used.

VLS-E series VLS3015E Type

■ELECTRICAL CHARACTERISTICS

□L FREQUENCY CHARACTERISTICS GRAPH

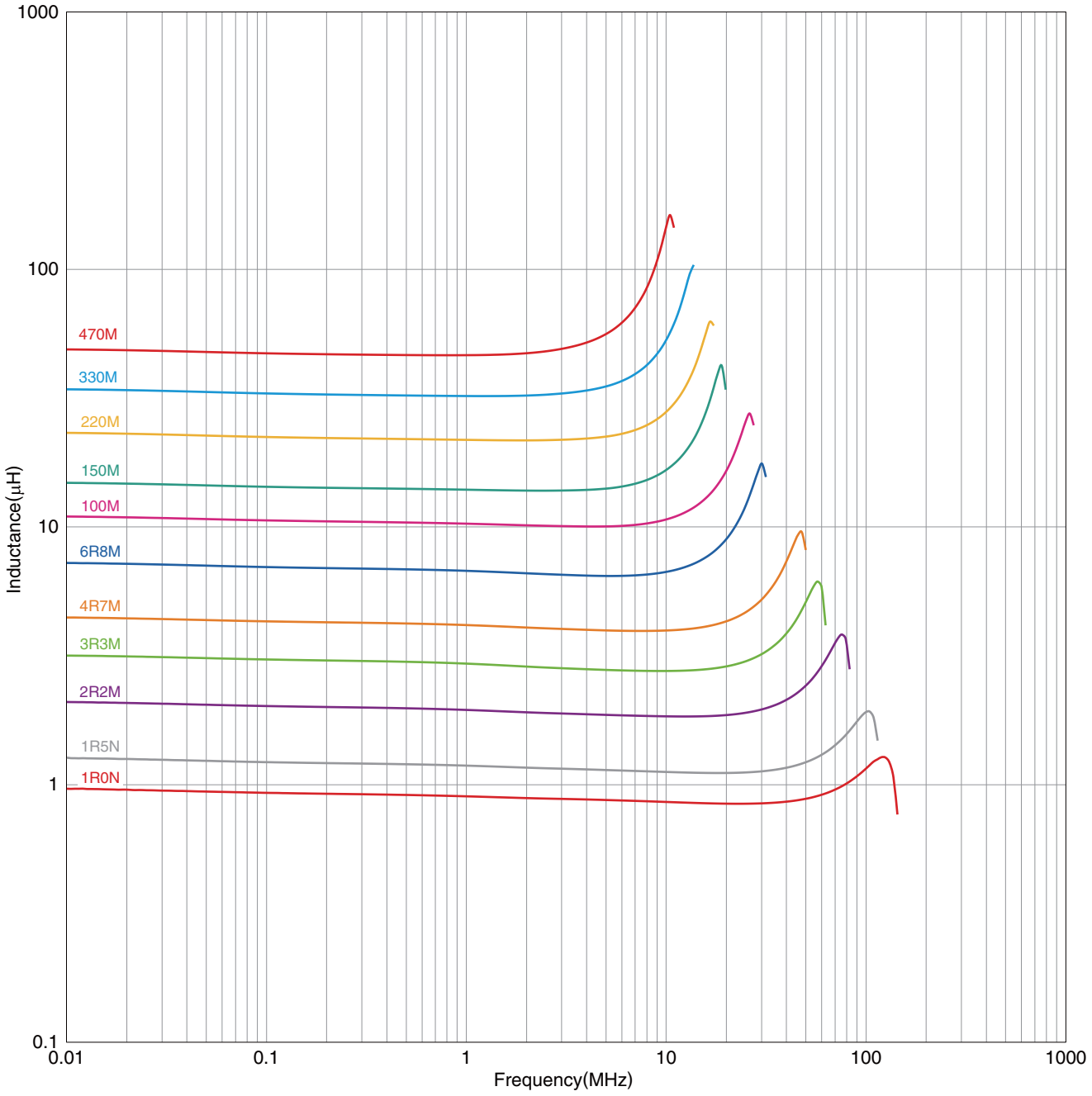

○ Measurement equipment

Product No.	Manufacturer
4294A	Agilent Technologies

∗ Equivalent measurement equipment may be used.

VLS-E series VLS3015E Type

■ELECTRICAL CHARACTERISTICS

□INDUCTANCE VS. DC BIAS CHARACTERISTICS GRAPH

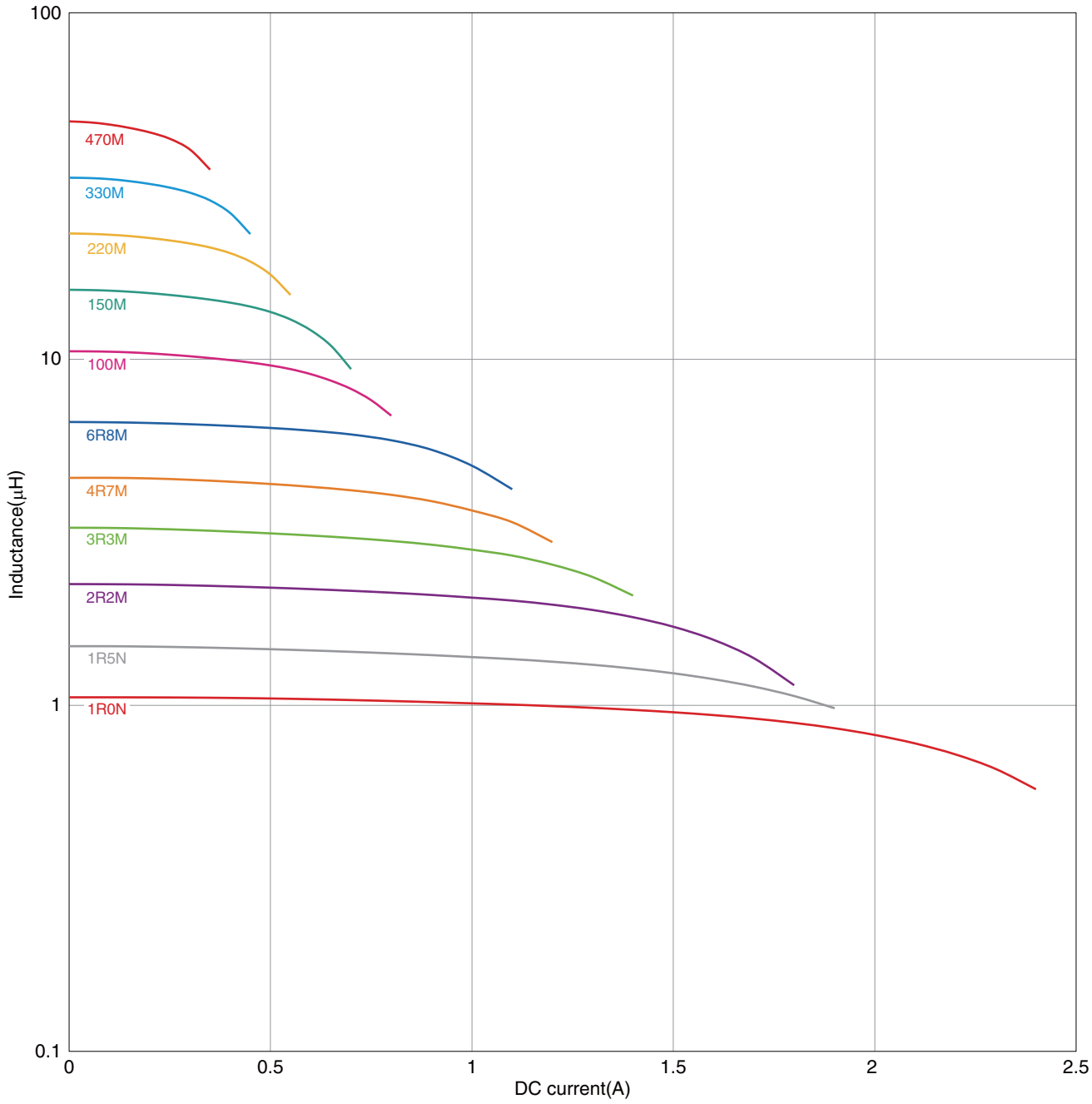

○ Measurement equipment

Product No.	Manufacturer
4285A+42841A+42842C	Agilent Technologies

＊ Equivalent measurement equipment may be used.

VLS-E series

VLS4012E Type



SHAPE & DIMENSIONS

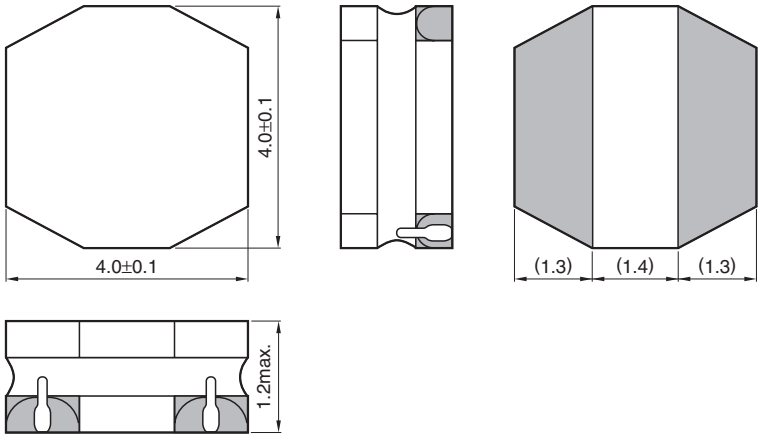

Dimensions in mm

RECOMMENDED LAND PATTERN

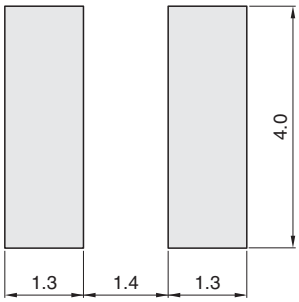

Dimensions in mm

VLS-E series VLS4012E Type

■ELECTRICAL CHARACTERISTICS

□CHARACTERISTICS SPECIFICATION TABLE

L		Measuring frequency (MHz)	DC resistance (Ω)		Rated current*(A)			Part No.
					max.	typ.		
(μH)	Tolerance		max.	typ.	Idc1	Idc1	Idc2	
1.0	±30%	1.0	0.060	0.050	2.50	2.80	2.65	VLS4012ET-1R0N
1.5	±30%	1.0	0.072	0.060	2.10	2.30	2.45	VLS4012ET-1R5N
2.2	±20%	1.0	0.081	0.067	1.70	1.90	2.20	VLS4012ET-2R2M
3.3	±20%	1.0	0.102	0.085	1.40	1.60	2.00	VLS4012ET-3R3M
4.7	±20%	1.0	0.118	0.098	1.20	1.40	1.90	VLS4012ET-4R7M
6.8	±20%	1.0	0.156	0.130	1.00	1.20	1.60	VLS4012ET-6R8M
10	±20%	1.0	0.228	0.190	0.89	0.99	1.33	VLS4012ET-100M
15	±20%	1.0	0.372	0.310	0.70	0.78	1.05	VLS4012ET-150M
22	±20%	1.0	0.468	0.390	0.63	0.70	0.95	VLS4012ET-220M
33	±20%	1.0	0.804	0.670	0.47	0.53	0.70	VLS4012ET-330M
47	±20%	1.0	1.020	0.850	0.41	0.46	0.61	VLS4012ET-470M

* Rated current: smaller value of either Idc1 or Idc2.
Idc1: When based on the inductance change rate (30% below the nominal value)
Idc2: When based on the temperature increase (Temperature increase of 40°C by self heating)

○ Measurement equipment

Measurement item	Product No.	Manufacturer
L	4194A	Agilent Technologies
DC resistance	VP-2941A	Panasonic
Rated current Idc1	4285A+42841A+42842C	Agilent Technologies

＊ Equivalent measurement equipment may be used.

VLS-E series VLS4012E Type

■ELECTRICAL CHARACTERISTICS

□L FREQUENCY CHARACTERISTICS GRAPH

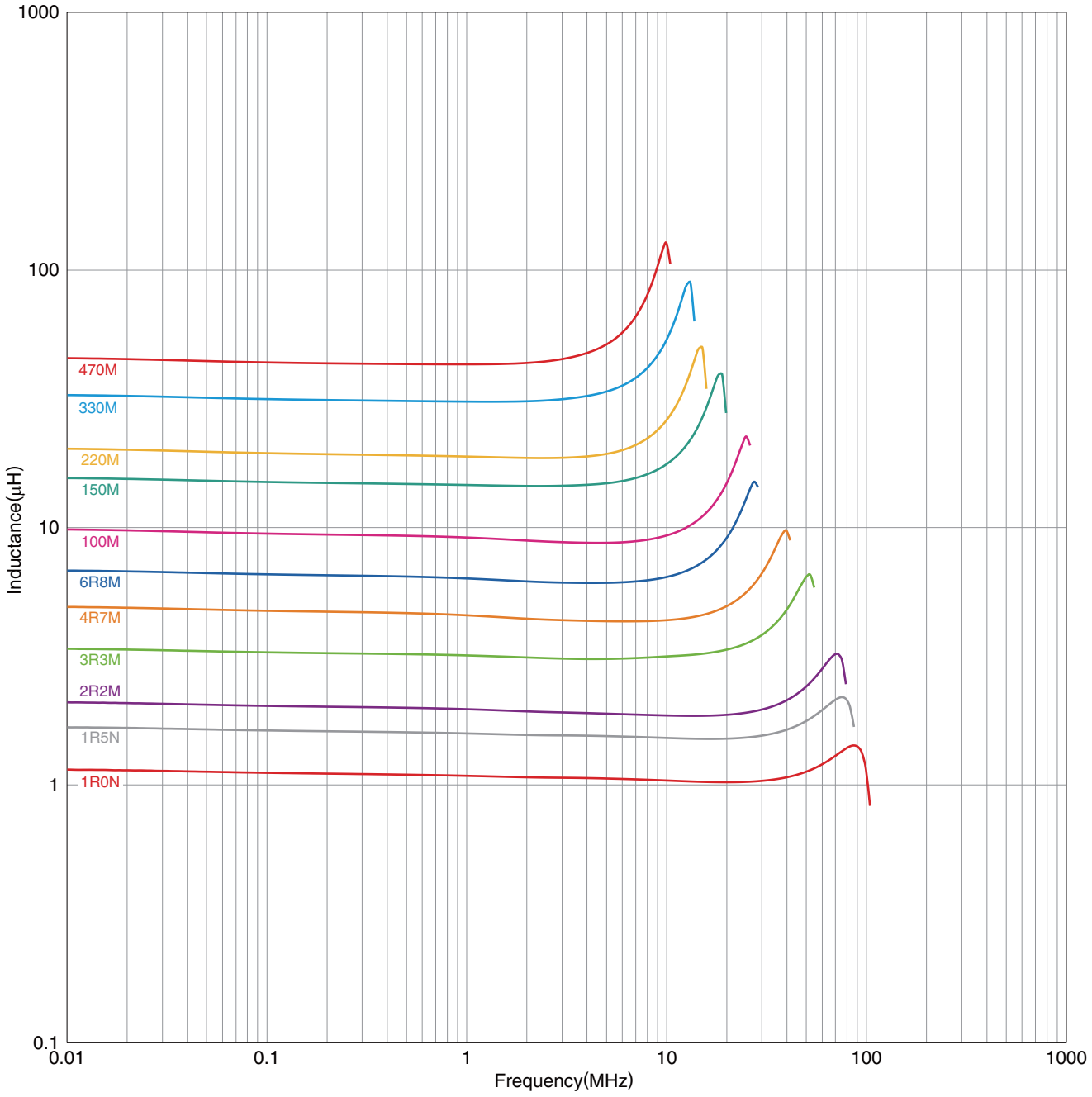

○ Measurement equipment

Product No.	Manufacturer
4294A	Agilent Technologies

＊ Equivalent measurement equipment may be used.

VLS-E series VLS4012E Type

■ELECTRICAL CHARACTERISTICS

□INDUCTANCE VS. DC BIAS CHARACTERISTICS GRAPH

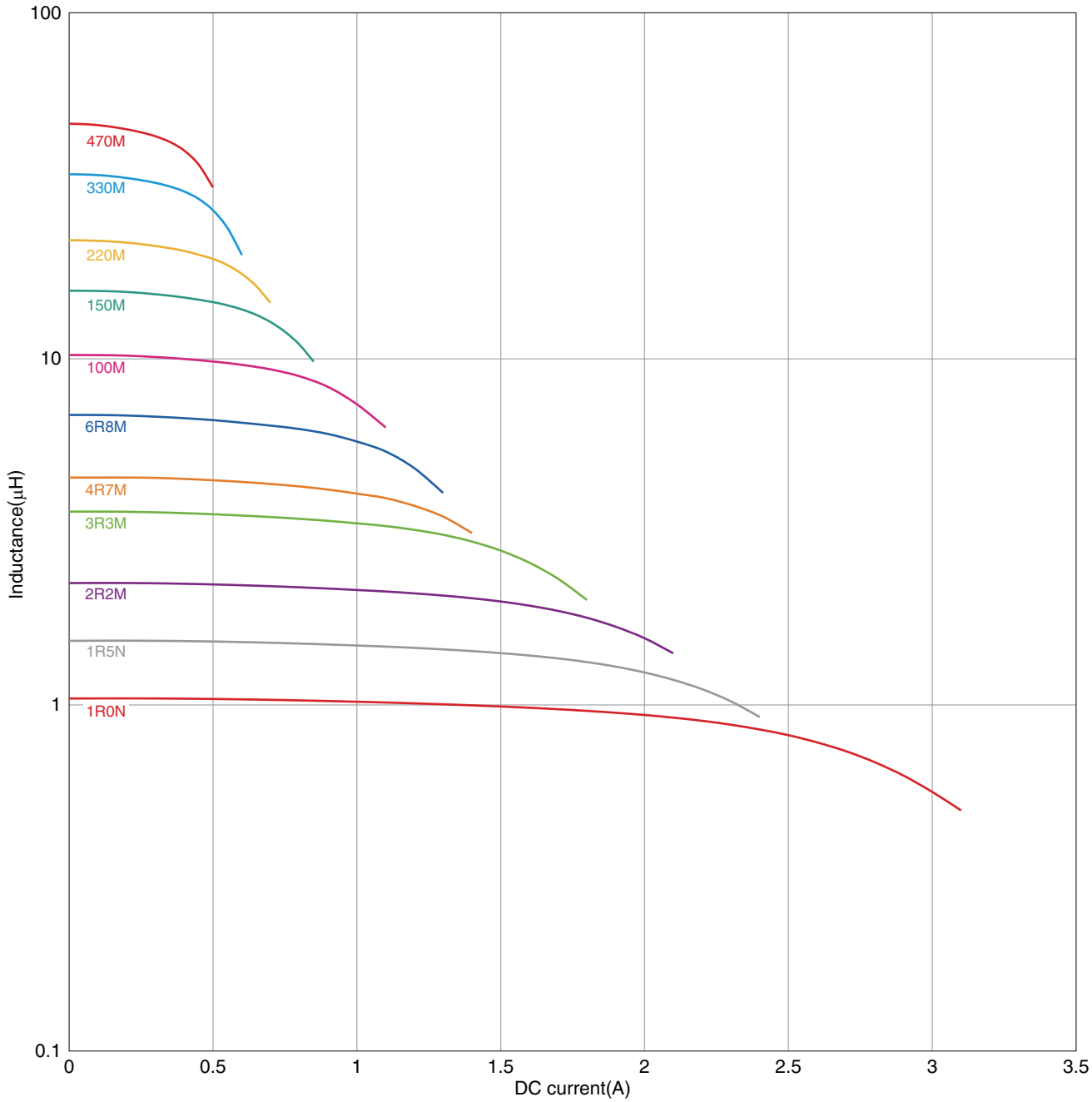

○ Measurement equipment

Product No.	Manufacturer
4285A+42841A+42842C	Agilent Technologies

＊ Equivalent measurement equipment may be used.

VLS-E series

Packaging Style

REEL DIMENSIONS

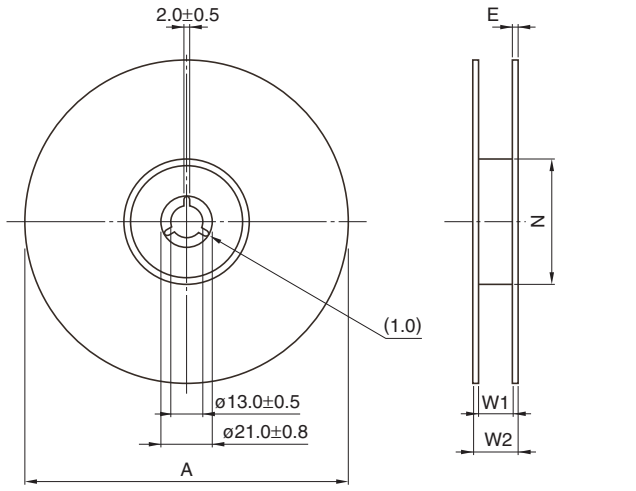

Dimensions in mm

Type	A	W1	W2	N	E
VLS201610E	ø180	9	13	ø60	0.5
VLS201612E	ø180	9	13	ø60	0.5
VLS2010E	ø180	9	13	ø60	0.5
VLS2012E	ø180	9	13	ø60	0.5
VLS252008E	ø180	9	13	ø60	0.5
VLS252010E	ø180	9	13	ø60	0.5
VLS252012E	ø180	9	13	ø60	0.5
VLS252015E	ø180	9	13	ø60	0.5
VLS3010E	ø180	9	13	ø60	0.5
VLS3012E	ø180	9	13	ø60	0.5
VLS3015E	ø180	9	13	ø60	0.5
VLS4012E	ø180	13	17	ø60	0.5

* These values are typical values.

TAPE DIMENSIONS

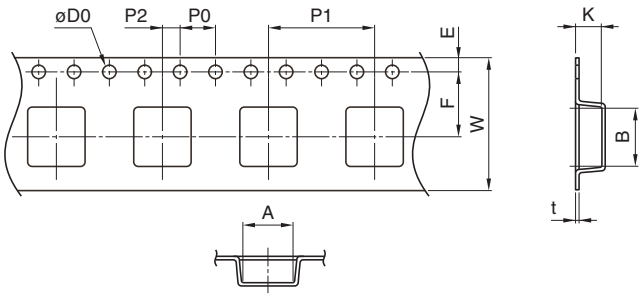

Dimensions in mm

Type	A	B	øD0	E	F	P0	P1	P2	W	K	t
VLS201610E	1.8	2.2	1.5+0.10/-0	1.75±0.1	3.5±0.05	4.0±0.1	4.0±0.1	2.00±0.05	8.0±0.2	1.1	0.25
VLS201612E	1.8	2.2	1.5+0.10/-0	1.75±0.1	3.5±0.05	4.0±0.1	4.0±0.1	2.00±0.05	8.0±0.2	1.3	0.25
VLS2010E	2.2	2.2	1.5+0.10/-0	1.75±0.1	3.5±0.05	4.0±0.1	4.0±0.1	2.00±0.05	8.0±0.2	1.1	0.25
VLS2012E	2.2	2.2	1.5+0.10/-0	1.75±0.1	3.5±0.05	4.0±0.1	4.0±0.1	2.00±0.05	8.0±0.2	1.35	0.25
VLS252008E	2.15	2.7	1.5+0.10/-0	1.75±0.1	3.5±0.05	4.0±0.1	4.0±0.1	2.00±0.05	8.0±0.2	0.95	0.25
VLS252010E	2.15	2.7	1.5+0.10/-0	1.75±0.1	3.5±0.05	4.0±0.1	4.0±0.1	2.00±0.05	8.0±0.2	1.15	0.3
VLS252012E	2.15	2.7	1.5+0.10/-0	1.75±0.1	3.5±0.05	4.0±0.1	4.0±0.1	2.00±0.05	8.0±0.2	1.35	0.3
VLS252015E	2.15	2.7	1.5+0.10/-0	1.75±0.1	3.5±0.05	4.0±0.1	4.0±0.1	2.00±0.05	8.0±0.2	1.65	0.3
VLS3010E	3.2	3.2	1.5+0.10/-0	1.75±0.1	3.5±0.05	4.0±0.1	4.0±0.1	2.00±0.05	8.0±0.2	1.15	0.25
VLS3012E	3.2	3.2	1.5+0.10/-0	1.75±0.1	3.5±0.05	4.0±0.1	4.0±0.1	2.00±0.05	8.0±0.2	1.35	0.25
VLS3015E	3.2	3.2	1.5+0.10/-0	1.75±0.1	3.5±0.05	4.0±0.1	4.0±0.1	2.00±0.05	8.0±0.2	1.65	0.25
VLS4012E	4.25	4.25	1.5+0.10/-0	1.75±0.1	5.5±0.05	4.0±0.1	8.0±0.1	2.00±0.05	12.0±0.2	1.35	0.3