TDK

April 2016

Inductors for Power Circuits

Wound Ferrite

VLS-E Series

VLS252008E Type

VLS252008E

REMINDERS FOR USING THESE PRODUCTS

Before using these products, be sure to request the delivery specifications.

SAFETY REMINDERS

Please pay sufficient attention to the warnings for safe designing when using these products.

⚠ REMINDERS

- The storage period is less than 12 months. Be sure to follow the storage conditions (Temperature: 5 to 40°C, Humidity: 10 to 75% RH or less).
  If the storage period elapses, the soldering of the terminal electrodes may deteriorate.
- Do not use or store in locations where there are conditions such as gas corrosion (salt, acid, alkali, etc.).
- Before soldering, be sure to preheat components.
  The preheating temperature should be set so that the temperature difference between the solder temperature and chip temperature does not exceed 150°C.
- Soldering corrections after mounting should be within the range of the conditions determined in the specifications.
  If overheated, a short circuit, performance deterioration, or lifespan shortening may occur.
- When embedding a printed circuit board where a chip is mounted to a set, be sure that residual stress is not given to the chip due to the overall distortion of the printed circuit board and partial distortion such as at screw tightening portions.
- Self heating (temperature increase) occurs when the power is turned ON, so the tolerance should be sufficient for the set thermal design.
- Carefully lay out the coil for the circuit board design of the non-magnetic shield type.
  A malfunction may occur due to magnetic interference.
- Use a wrist band to discharge static electricity in your body through the grounding wire.
- Do not expose the products to magnets or magnetic fields.
- Do not use for a purpose outside of the contents regulated in the delivery specifications.
- The products listed on this catalog are intended for use in general electronic equipment (AV equipment, telecommunications equipment, home appliances, amusement equipment, computer equipment, personal equipment, office equipment, measurement equipment, industrial robots) under a normal operation and use condition.
  The products are not designed or warranted to meet the requirements of the applications listed below, whose performance and/or quality require a more stringent level of safety or reliability, or whose failure, malfunction or trouble could cause serious damage to society, person or property.
  If you intend to use the products in the applications listed below or if you have special requirements exceeding the range or conditions set forth in the each catalog, please contact us.

(1) Aerospace/Aviation equipment
(2) Transportation equipment (cars, electric trains, ships, etc.)
(3) Medical equipment
(4) Power-generation control equipment
(5) Atomic energy-related equipment
(6) Seabed equipment
(7) Transportation control equipment
(8) Public information-processing equipment
(9) Military equipment
(10) Electric heating apparatus, burning equipment
(11) Disaster prevention/crime prevention equipment
(12) Safety equipment
(13) Other applications that are not considered general-purpose applications

When designing your equipment even for general-purpose applications, you are kindly requested to take into consideration securing protection circuit/device or providing backup circuits in your equipment.

Inductors for Power Circuits

Wound Ferrite

Product compatible with RoHS directive
Halogen-free
Compatible with lead-free solders

Overview of VLS252008E Type

FEATURES

- Magnetic shield type wound inductor for power circuits.
- Low-profile product.
- High magnetic shield construction and compatible with high-density mounting.

APPLICATION

Smart phones, tablet terminals, HDDs, SSDs, DVCs, DSCs, mobile display panels, portable game devices, compact power supply modules, other

PART NUMBER CONSTRUCTION

VLS | 252008 | E | T | - | R47 | N

Series name	LxWxH Dimensions (mm)		internal code	Packaging style		Inductance (µH)		Inductance tolerance	
	252008	2.5x2.0x0.8		T	Taping	R47	0.47	M	±20%
						2R2	2.2	N	±30%
						100	10		

OPERATING TEMPERATURE RANGE, PACKAGE QUANTITY, PRODUCT WEIGHT

Type	Temperature range		Package quantity	Individual weight
	Operating temperature* (°C)	Storage temperature** (°C)	(pieces/reel)	(mg)
VLS252008E	–40 to +105	–40 to +105	2000	15

* Operating temperature range includes self-temperature rise.
** The Storage temperature range is for after the circuit board is mounted.

○RoHS Directive Compliant Product: See the following for more details related to RoHS Directive compliant products. http://product.tdk.com/en/environment/rohs/
○Halogen-free: Indicates that Cl content is less than 900ppm, Br content is less than 900ppm, and that the total Cl and Br content is less than 1500ppm.

⚠ Please be sure to request delivery specifications that provide further details on the features and specifications of the products for proper and safe use.
Please note that the contents may change without any prior notice due to reasons such as upgrading.

VLS252008E Type

RECOMMENDED REFLOW PROFILE

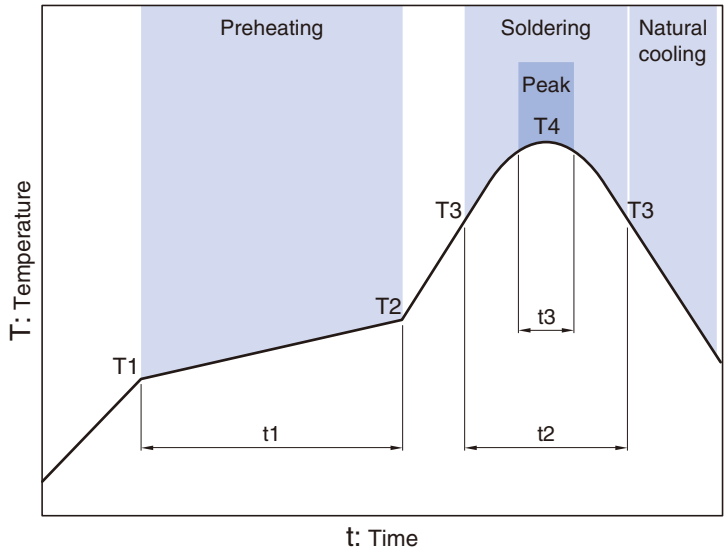

Preheating			Soldering		Peak	
Temp.		Time	Temp.	Time	Temp.	Time
T1	T2	t1	T3	t2	T4	t3
150°C	180°C	60 to 120s	230°C	30s	260°C	10s

⚠ Please be sure to request delivery specifications that provide further details on the features and specifications of the products for proper and safe use.
Please note that the contents may change without any prior notice due to reasons such as upgrading.

VLS252008E Type

SHAPE & DIMENSIONS

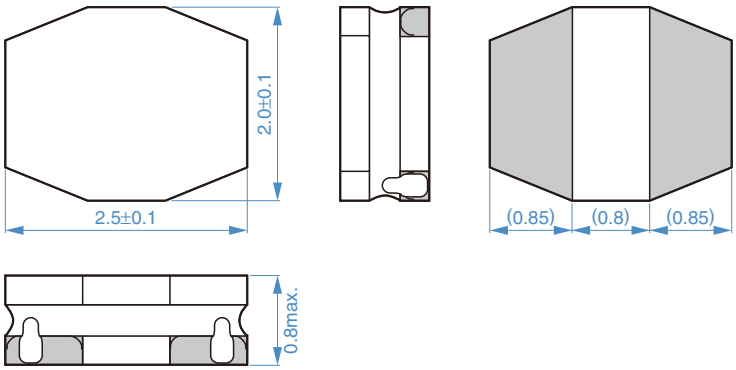



Dimensions in mm

RECOMMENDED LAND PATTERN

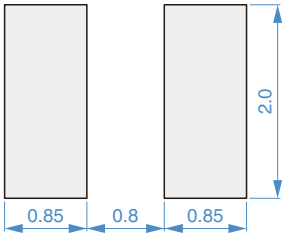

Dimensions in mm

⚠ Please be sure to request delivery specifications that provide further details on the features and specifications of the products for proper and safe use.
Please note that the contents may change without any prior notice due to reasons such as upgrading.

VLS252008E Type

■ELECTRICAL CHARACTERISTICS

□CHARACTERISTICS SPECIFICATION TABLE

L		Measuring frequency	DC resistance		Rated current*			Part No.
(μH)	Tolerance	(MHz)	(Ω)max.	(Ω)typ.	Isat (A)max.	Isat (A)typ.	Itemp (A)typ.	
0.47	±30%	1.0	0.140	0.116	1.65	1.80	1.20	VLS252008ET-R47N
1.0	±30%	1.0	0.219	0.182	1.20	1.35	0.97	VLS252008ET-1R0N
1.5	±30%	1.0	0.248	0.206	1.00	1.10	0.91	VLS252008ET-1R5N
2.2	±20%	1.0	0.290	0.241	0.77	0.86	0.84	VLS252008ET-2R2M
3.3	±20%	1.0	0.416	0.346	0.73	0.82	0.70	VLS252008ET-3R3M
4.7	±20%	1.0	0.580	0.483	0.61	0.68	0.59	VLS252008ET-4R7M
6.8	±20%	1.0	0.818	0.681	0.49	0.55	0.50	VLS252008ET-6R8M
10.0	±20%	1.0	1.232	1.026	0.43	0.48	0.41	VLS252008ET-100M

* Rated current: smaller value of either Isat or Itemp.
Isat: When based on the inductance change rate (30% below the nominal value)
Itemp: When based on the temperature increase (Temperature increase of 40°C by self heating)

○ Measurement equipment

Measurement item	Product No.	Manufacturer
L	4194A	Keysight Technologies
DC resistance	VP-2941A	Panasonic
Rated current Isat	4285A+42841A+42842C	Keysight Technologies

＊ Equivalent measurement equipment may be used.

⚠ Please be sure to request delivery specifications that provide further details on the features and specifications of the products for proper and safe use.
Please note that the contents may change without any prior notice due to reasons such as upgrading.

VLS252008E Type

■ELECTRICAL CHARACTERISTICS

□L FREQUENCY CHARACTERISTICS GRAPH

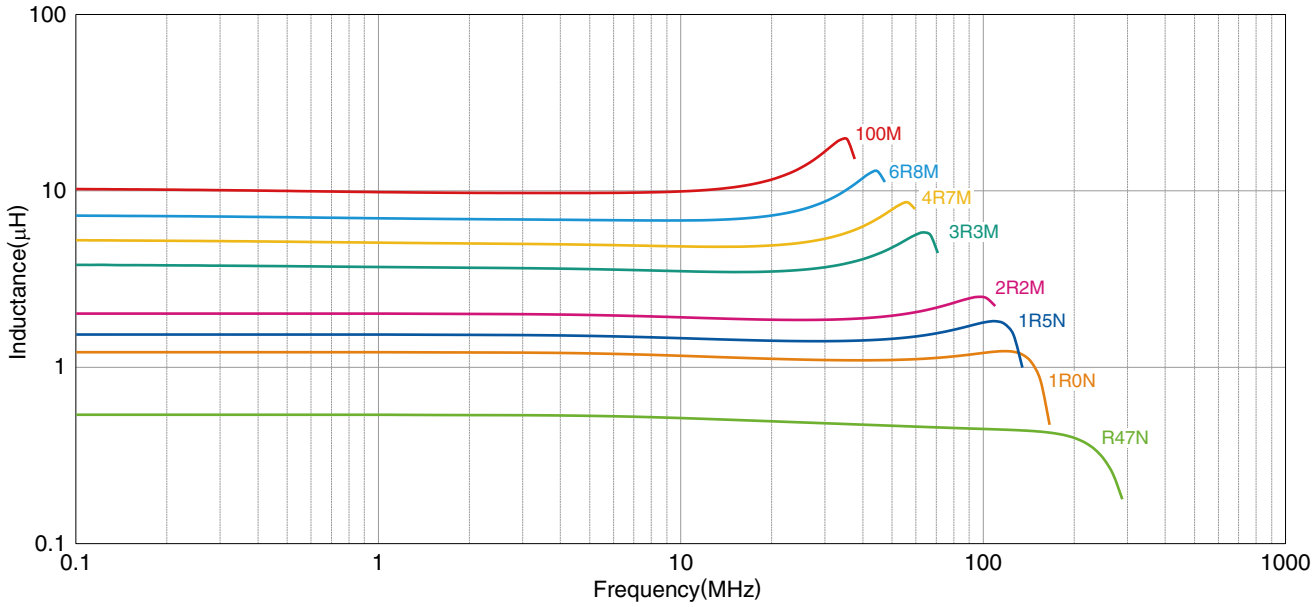

○ Measurement equipment

Product No.	Manufacturer
4294A	Keysight Technologies

＊ Equivalent measurement equipment may be used.

⚠ Please be sure to request delivery specifications that provide further details on the features and specifications of the products for proper and safe use.
Please note that the contents may change without any prior notice due to reasons such as upgrading.

VLS252008E Type

■ELECTRICAL CHARACTERISTICS

□INDUCTANCE VS. DC BIAS CHARACTERISTICS GRAPH

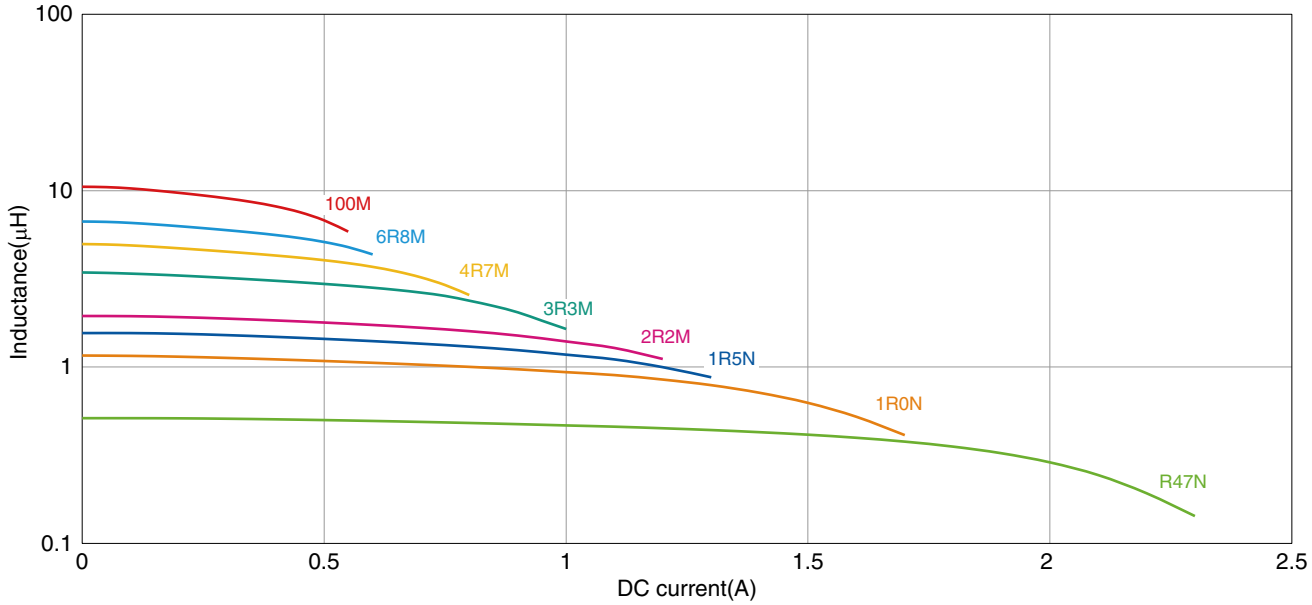

○ Measurement equipment

Product No.	Manufacturer
4285A+42841A+42842C	Keysight Technologies

＊ Equivalent measurement equipment may be used.

⚠ Please be sure to request delivery specifications that provide further details on the features and specifications of the products for proper and safe use.
Please note that the contents may change without any prior notice due to reasons such as upgrading.

VLS252008E Type

PACKAGING STYLE

REEL DIMENSIONS

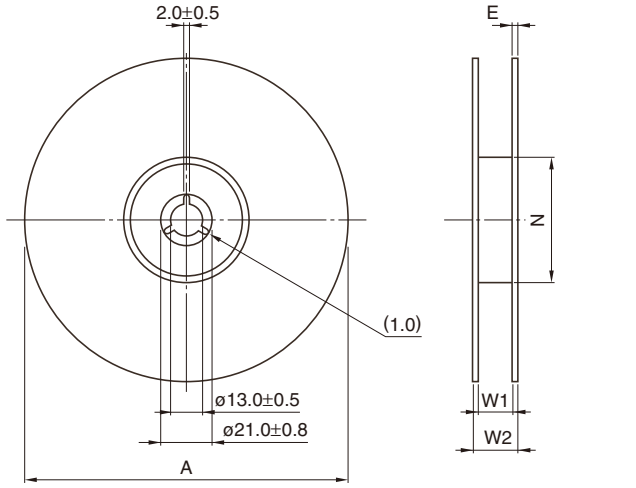

Dimensions in mm

Type	A	W1	W2	N	E
VLS252008E	ø180	9	13	ø60	0.5

* These values are typical values.

TAPE DIMENSIONS

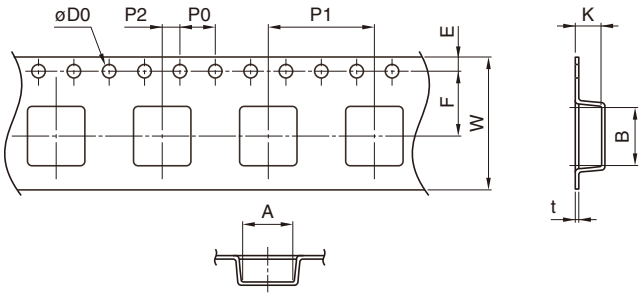

Dimensions in mm

Type	A	B	øD0	E	F	P0	P1	P2	W	K	t
VLS252008E	2.15	2.7	1.5+0.10/-0	1.75±0.1	3.5±0.05	4.0±0.1	4.0±0.1	2.00±0.05	8.0±0.2	0.95	0.25

⚠ Please be sure to request delivery specifications that provide further details on the features and specifications of the products for proper and safe use.
Please note that the contents may change without any prior notice due to reasons such as upgrading.