# Bicolor SMD LED PLCC-4

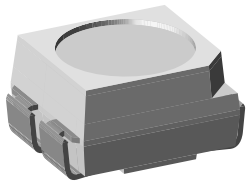

19211

## FEATURES

- SMD LED with exceptional brightness
- Multicolored
- Luminous intensity categorized
- EIA and ICE standard package
- Compatible with automatic placement equipment
- Suitable for IR reflow and TTW soldering
- Available in 8 mm tape
- Low profile package
- Non-diffused lens: excellent for coupling to light pipes and backlighting
- Low power consumption
- Luminous intensity ratio in one packaging unit $I_{Vmax}/I_{Vmin} \leq 1.6$
- Lead (Pb)-free product - RoHS compliant - lead (Pb)-free soldering
- JEDEC level 2a

## DESCRIPTION

These devices have been designed to meet the increasing demand for surface mounting technology.

The package of the VLMKE340. is the PLCC-4.

It consists of a lead frame which is embedded in a white thermoplast. The reflector inside this package is filled up with clear epoxy.

This SMD device consists of a red and yellow chip. So it is possible to choose the color in one device.

## APPLICATIONS

- Automotive: backlighting in dashboards and switches
- Telecommunication: indicator and backlighting in telephone and fax
- Indicator and backlight for audio and video equipment
- Indicator and backlight in office equipment
- Flat backlight for LCDs, switches and symbols
- General use

## PRODUCT GROUP AND PACKAGE DATA

- Product group: LED
- Package: SMD PLCC-4
- Product series: bicolor
- Angle of half intensity: ± 60°

**PARTS TABLE**

| PART | COLOR, LUMINOUS INTENSITY | TECHNOLOGY |
|---|---|---|
| VLMKE3400-GS08 | Red/yellow, $I_V$ > 56 mcd | AlInGaP on GaAs |
| VLMKE3400-GS18 | Red/yellow, $I_V$ > 56 mcd | AlInGaP on GaAs |
| VLMKE3401-GS08 | Red/yellow, $I_V$ > 71 mcd | AlInGaP on GaAs |
| VLMKE3401-GS18 | Red/yellow, $I_V$ > 71 mcd | AlInGaP on GaAs |

| ABSOLUTE MAXIMUM RATINGS[1] VLMKE340. | | | | |
|---|---|---|---|---|
| **PARAMETER** | **TEST CONDITION** | **SYMBOL** | **VALUE** | **UNIT** |
| Reverse voltage per diode[2] | $I_R$ = 10 µA | $V_R$ | 6 | V |
| DC Forward current per diode | $T_{amb} \leq 80$ °C | $I_F$ | 30 | mA |
| Surge forward current per diode | $t_p \leq 10$ µs | $I_{FSM}$ | 0.1 | A |
| Power dissipation per diode | | $P_V$ | 80 | mW |
| Junction temperature | | $T_j$ | 125 | °C |
| Operating temperature range | | $T_{amb}$ | - 40 to + 100 | °C |
| Storage temperature range | | $T_{stg}$ | - 40 to + 100 | °C |
| Thermal resistance junction/ ambient | mounted on PC board (pad size > 16 mm$^2$) | $R_{thJA}$ | 560 | K/W |

Note:
[1] $T_{amb}$ = 25 °C, unless otherwise specified
[2] Driving the LED in reverse direction is suitable for short term application

| OPTICAL AND ELECTRICAL CHARACTERISTICS[1] VLMKE340., RED | | | | | | | |
|---|---|---|---|---|---|---|---|
| **PARAMETER** | **TEST CONDITION** | **PART** | **SYMBOL** | **MIN** | **TYP.** | **MAX** | **UNIT** |
| Luminous intensity | $I_F$ = 20 mA | VLMKE3400 | $I_V$ | 56 | | 180 | mcd |
| | | VLMKE3401 | $I_V$ | 71 | | 140 | mcd |
| Dominant wavelength | $I_F$ = 20 mA | | $\lambda_d$ | | 630 | | nm |
| Peak wavelength | $I_F$ = 20 mA | | $\lambda_p$ | | 643 | | nm |
| Angle of half intensity | $I_F$ = 20 mA | | $\varphi$ | | ± 60 | | deg |
| Forward voltage | $I_F$ = 20 mA | | $V_F$ | | 1.9 | 2.6 | V |
| Reverse voltage | $I_R$ = 10 µA | | $V_R$ | 6 | | | V |
| Junction capacitance | $V_R$ = 0, f = 1 MHz | | $C_j$ | | 15 | | pF |

Note:
[1] $T_{amb}$ = 25 °C, unless otherwise specified

| OPTICAL AND ELECTRICAL CHARACTERISTICS[1] VLMKE340., YELLOW | | | | | | | |
|---|---|---|---|---|---|---|---|
| **PARAMETER** | **TEST CONDITION** | **PART** | **SYMBOL** | **MIN** | **TYP.** | **MAX** | **UNIT** |
| Luminous intensity | $I_F$ = 20 mA | VLMKE3400 | $I_V$ | 90 | | 280 | mcd |
| | | VLMKE3401 | $I_V$ | 112 | | 224 | mcd |
| Dominant wavelength | $I_F$ = 20 mA | | $\lambda_d$ | 581 | 588 | 594 | nm |
| Peak wavelength | $I_F$ = 20 mA | | $\lambda_p$ | | 590 | | nm |
| Angle of half intensity | $I_F$ = 20 mA | | $\varphi$ | | ± 60 | | deg |
| Forward voltage | $I_F$ = 20 mA | | $V_F$ | | 2 | 2.6 | V |
| Reverse voltage | $I_R$ = 10 µA | | $V_R$ | 6 | | | V |
| Junction capacitance | $V_R$ = 0, f = 1 MHz | | $C_j$ | | 15 | | pF |

Note:
[1] $T_{amb}$ = 25 °C, unless otherwise specified

| LUMINOUS INTENSITY CLASSIFICATION AND GROUP COMBINATIONS TLMKE34..[1)] | | | | | | |
|---|---|---|---|---|---|---|
| | | RED | | | | |
| | | P2<br>56...71 mcd | Q1<br>71...90 mcd | Q2<br>90...112 mcd | R1<br>112...140 mcd | R2<br>140...180 mcd |
| YELLOW | Q2<br>90...112 mcd | 00 | 00 | 00 | 00 | 00 |
| | R1<br>112...140 mcd | 00 | 00<br>01 | 00<br>01 | 00<br>01 | 00 |
| | R2<br>140...180 mcd | 00 | 00<br>01 | 00<br>01 | 00<br>01 | 00 |
| | S1<br>180...224 mcd | 00 | 00<br>01 | 00<br>01 | 00<br>01 | 00 |
| | S2<br>224...280 mcd | 00 | 00 | 00 | 00 | 00 |

Note:
[1)] followed by 00 or 01

| COLOR CLASSIFICATION | | |
|---|---|---|
| GROUP | DOMINANT WAVELENGTH (NM) | |
| | YELLOW | |
| | MAX | MAX |
| 1 | 581 | 584 |
| 2 | 583 | 586 |
| 3 | 585 | 588 |
| 4 | 587 | 590 |
| 5 | 589 | 592 |
| 6 | 591 | 594 |

## TYPICAL CHARACTERISTICS

$T_{amb}$ = 25 °C, unless otherwise specified

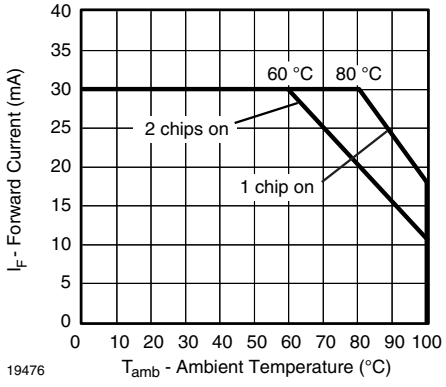


Figure 1. Forward Current vs. Ambient Temperature for InGaN

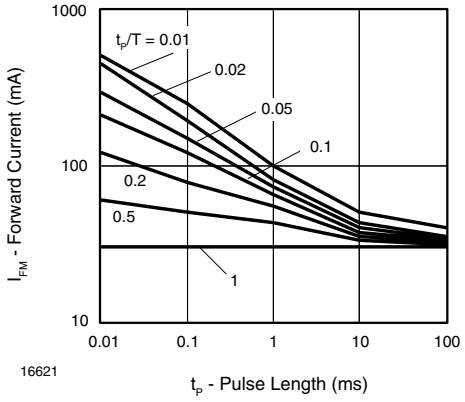


Figure 2. Forward Current vs. Pulse Duration

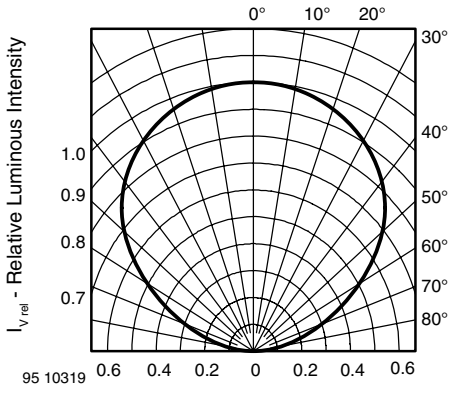


Figure 3. Rel. Luminous Intensity vs. Angular Displacement

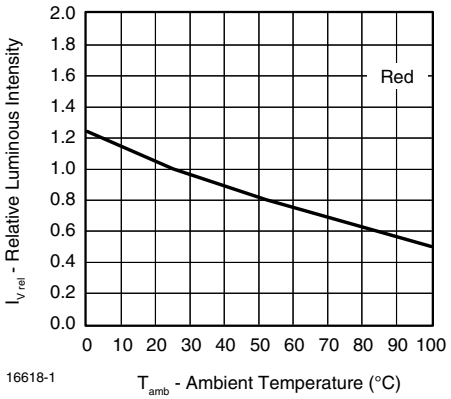


Figure 6. Rel. Luminous Intensity vs. Ambient Temperature

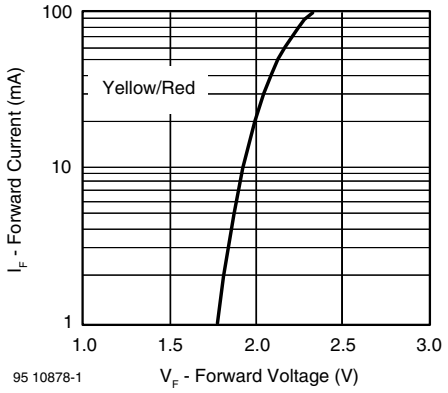


Figure 4. Forward Current vs. Forward Voltage

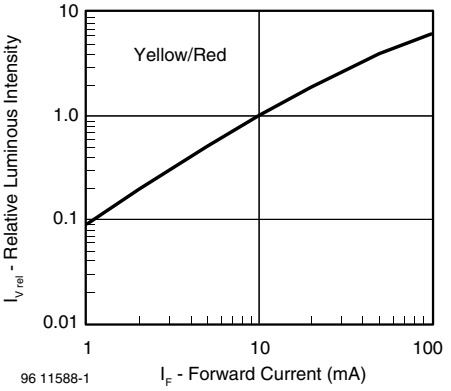


Figure 7. Relative Luminous Intensity vs. Forward Current

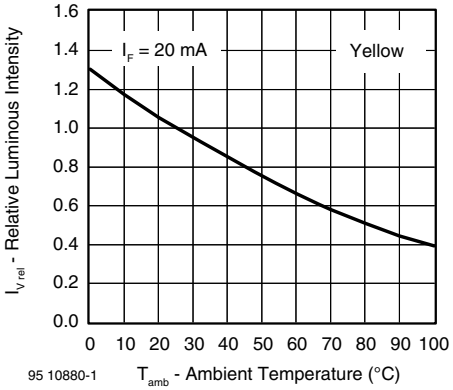


Figure 5. Rel. Luminous Intensity vs. Ambient Temperature

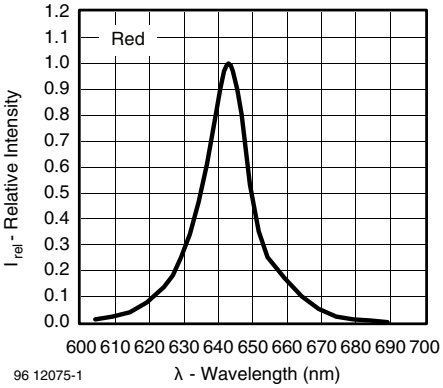


Figure 8. Relative Intensity vs. Wavelength

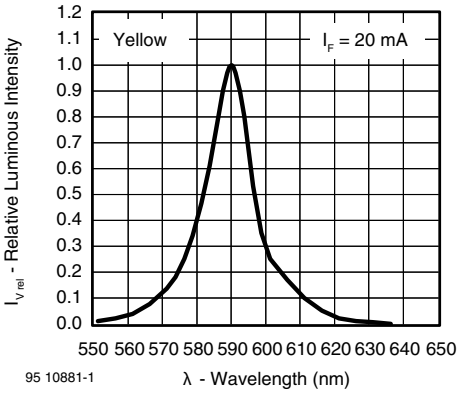


Figure 9. Relative Intensity vs. Wavelength

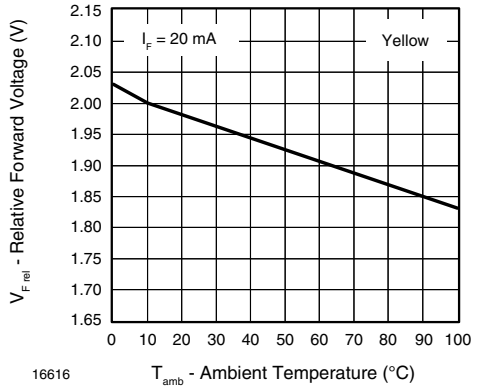


Figure 11. Relative Forward Voltage vs. Ambient Temperature

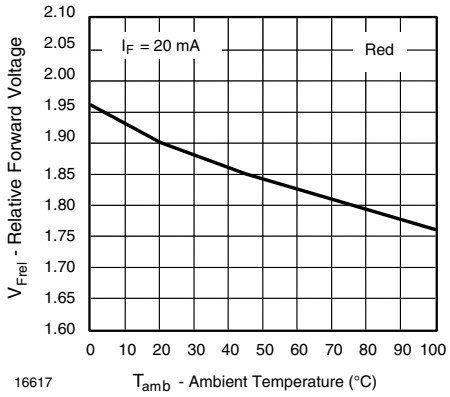


Figure 10. Relative Forward Voltage vs. Ambient Temperature

## **PACKAGE DIMENSIONS** in millimeters

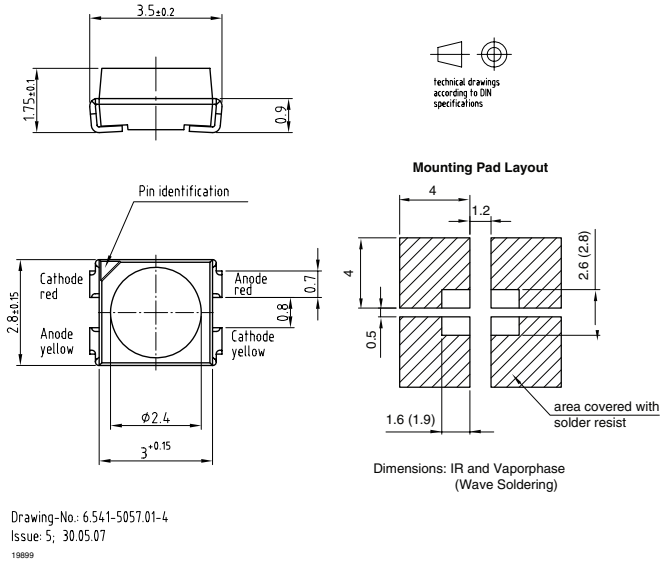

## METHOD OF TAPING/POLARITY AND TAPE AND REEL

### SMD LED (VLM.3 - SERIES)

Vishay's LEDs in SMD packages are available in an antistatic 8 mm blister tape (in accordance with DIN IEC 40 (CO) 564) for automatic component insertion. The blister tape is a plastic strip with impressed component cavities, covered by a top tape.

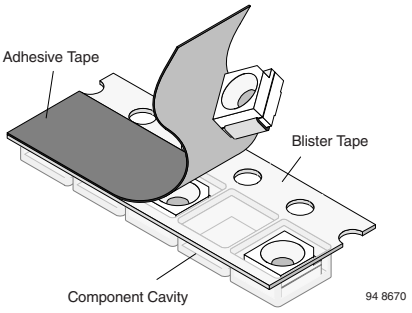


### TAPING OF VLM.3...

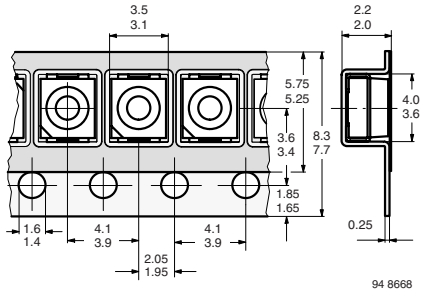


Figure 12. Tape dimensions in mm for PLCC-2

### REEL PACKAGE DIMENSION IN MM FOR SMD LEDS, TAPE OPTION GS08 (= 1500 PCS.)

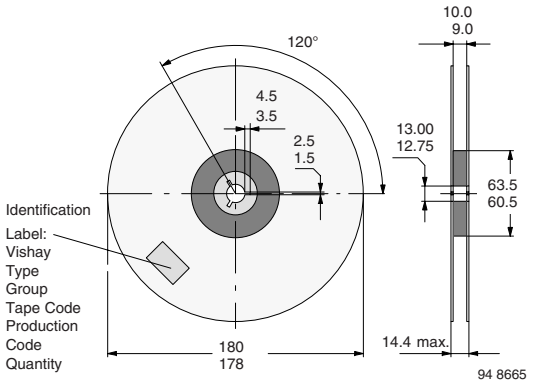


Figure 13. Reel dimensions - GS08

### REEL PACKAGE DIMENSION IN MM FOR SMD LEDS, TAPE OPTION GS18 (= 8000 PCS.) PREFERRED

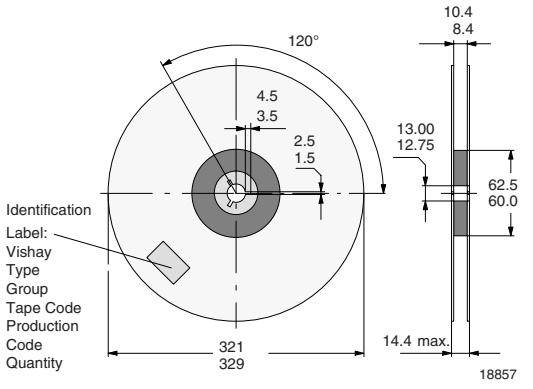


Figure 14. Reel dimensions - GS18

## SOLDERING PROFILE

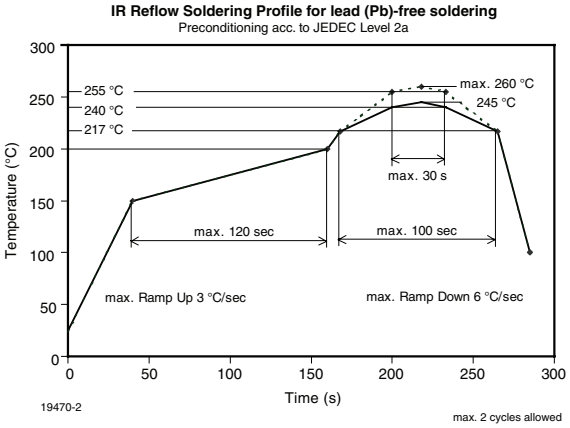


Figure 15. Vishay Lead (Pb)-free Reflow Soldering Profile (acc. to J-STD-020B)

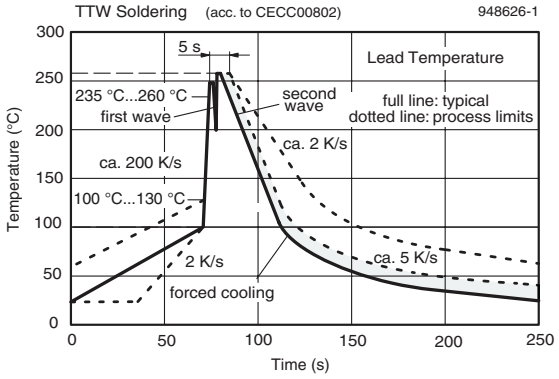


Figure 16. Double Wave Soldering of Opto Devices (all Packages)

## DRY PACKING

The reel is packed in an anti-humidity bag to protect the devices from absorbing moisture during transportation and storage.

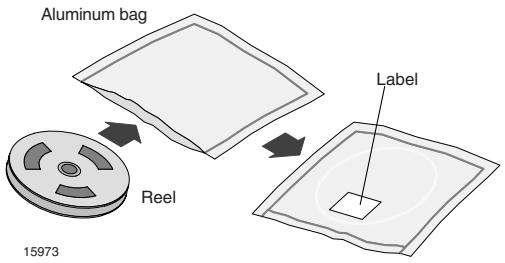


## FINAL PACKING

The sealed reel is packed into a cardboard box. A secondary cardboard box is used for shipping purposes.

## RECOMMENDED METHOD OF STORAGE

Dry box storage is recommended as soon as the aluminum bag has been opened to prevent moisture absorption. The following conditions should be observed, if dry boxes are not available:

- Storage temperature 10 °C to 30 °C
- Storage humidity ≤ 60 % RH max.

After more than 672 h under these conditions moisture content will be too high for reflow soldering.

In case of moisture absorption, the devices will recover to the former condition by drying under the following condition:

192 h at 40 °C + 5 °C/ - 0 °C and < 5 % RH (dry air/nitrogen) or

96 h at 60 °C + 5 °C and < 5 % RH for all device containers or

24 h at 100 °C + 5 °C not suitable for reel or tubes.

An EIA JEDEC standard JESD22-A112 level 2a label is included on all dry bags.

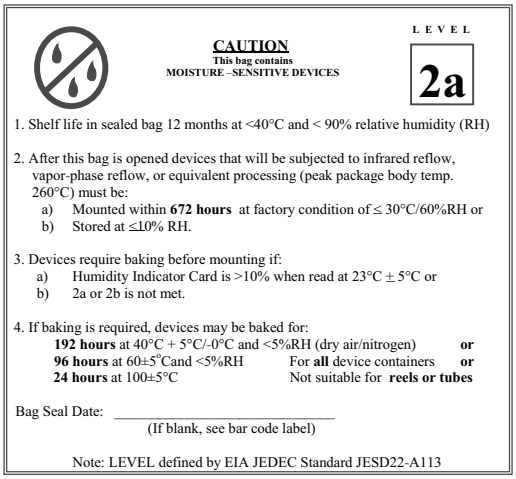


Example of JESD22-A112 level 2a label

## ESD PRECAUTION

Proper storage and handling procedures should be followed to prevent ESD damage to the devices especially when they are removed from the antistatic shielding bag. Electro-static sensitive devices warning labels are on the packaging.

## VISHAY SEMICONDUCTORS STANDARD BAR CODE LABELS

The Vishay Semiconductors standard bar code labels are printed at final packing areas. The labels are on each packing unit and contain Vishay Semiconductors specific data.

## OZONE DEPLETING SUBSTANCES POLICY STATEMENT

It is the policy of Vishay Semiconductor GmbH to

1. Meet all present and future national and international statutory requirements.
2. Regularly and continuously improve the performance of our products, processes, distribution and operating systems with respect to their impact on the health and safety of our employees and the public, as well as their impact on the environment.

It is particular concern to control or eliminate releases of those substances into the atmosphere which are known as ozone depleting substances (ODSs).

The Montreal Protocol (1987) and its London Amendments (1990) intend to severely restrict the use of ODSs and forbid their use within the next ten years. Various national and international initiatives are pressing for an earlier ban on these substances.

Vishay Semiconductor GmbH has been able to use its policy of continuous improvements to eliminate the use of ODSs listed in the following documents.

1. Annex A, B and list of transitional substances of the Montreal Protocol and the London Amendments respectively
2. Class I and II ozone depleting substances in the Clean Air Act Amendments of 1990 by the Environmental Protection Agency (EPA) in the USA
3. Council Decision 88/540/EEC and 91/690/EEC Annex A, B and C (transitional substances) respectively.

Vishay Semiconductor GmbH can certify that our semiconductors are not manufactured with ozone depleting substances and do not contain such substances.

We reserve the right to make changes to improve technical design
and may do so without further notice.
Parameters can vary in different applications. All operating parameters must be validated for each customer application by the customer. Should the buyer use Vishay Semiconductors products for any unintended or unauthorized application, the buyer shall indemnify Vishay Semiconductors against all claims, costs, damages, and expenses, arising out of, directly or indirectly, any claim of personal damage, injury or death associated with such unintended or unauthorized use.

Vishay Semiconductor GmbH, P.O.B. 3535, D-74025 Heilbronn, Germany

# Disclaimer

All product specifications and data are subject to change without notice.

Vishay Intertechnology, Inc., its affiliates, agents, and employees, and all persons acting on its or their behalf (collectively, “Vishay”), disclaim any and all liability for any errors, inaccuracies or incompleteness contained herein or in any other disclosure relating to any product.

Vishay disclaims any and all liability arising out of the use or application of any product described herein or of any information provided herein to the maximum extent permitted by law. The product specifications do not expand or otherwise modify Vishay’s terms and conditions of purchase, including but not limited to the warranty expressed therein, which apply to these products.

No license, express or implied, by estoppel or otherwise, to any intellectual property rights is granted by this document or by any conduct of Vishay.

The products shown herein are not designed for use in medical, life-saving, or life-sustaining applications unless otherwise expressly indicated. Customers using or selling Vishay products not expressly indicated for use in such applications do so entirely at their own risk and agree to fully indemnify Vishay for any damages arising or resulting from such use or sale. Please contact authorized Vishay personnel to obtain written terms and conditions regarding products designed for such applications.

Product names and markings noted herein may be trademarks of their respective owners.