Standard SMD LED PLCC-2

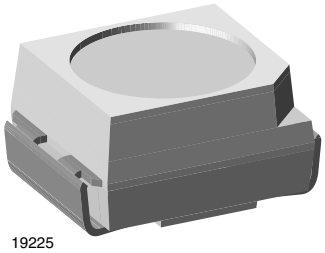

19225

DESCRIPTION

This device has been designed to meet the increasing demand for AlInGaP technology.

The package of the VLMK31.. is the PLCC-2.

It consists of a lead frame which is embedded in a white thermoplast. The reflector inside this package is filled up with clear epoxy.

PRODUCT GROUP AND PACKAGE DATA

- Product group: LED
- Package: SMD PLCC-2
- Product series: standard
- Angle of half intensity: ± 60°

FEATURES

- SMD LED with exceptional brightness
- Luminous intensity categorized
- Compatible with automatic placement equipment
- EIA and ICE standard package
- Compatible with IR reflow, vapor phase and wave solder processes according to CECC 00802 and J-STD-020
- Available in 8 mm tape
- Low profile package
- Non-diffused lens: excellent for coupling to light pipes and backlighting
- Low power consumption
- Luminous intensity ratio in one packaging unit $I_{Vmax.}/I_{Vmin.} \leq 1.6$
- Preconditioning according to JEDEC® level 2a
- ESD-withstand voltage: up to 2 kV according to JESD22-A114-B
- AEC-Q101 qualified
- Material categorization: for definitions of compliance please see www.vishay.com/doc?99912

APPLICATIONS

- Automotive: backlighting in dashboards and switches
- Telecommunication: indicator and backlighting in telephone and fax
- Indicator and backlight for audio and video equipment
- Indicator and backlight in office equipment
- Flat backlight for LCDs, switches, and symbols
- General use

PARTS TABLE

PART	COLOR	LUMINOUS INTENSITY (mcd)			at I_F (mA)	WAVELENGTH (nm)			at I_F (mA)	FORWARD VOLTAGE (V)			at I_F (mA)	TECHNOLOGY
		MIN.	TYP.	MAX.		MIN.	TYP.	MAX.		MIN.	TYP.	MAX.		
VLMK31Q1R2-GS08	Red	71	138	180	20	-	630	-	20	-	1.9	2.6	20	AlInGaP on GaAs
VLMK31Q1R2-GS18	Red	71	138	180	20	-	630	-	20	-	1.9	2.6	20	AlInGaP on GaAs
VLMK31R1S1-GS08	Red	112	142	224	20	-	630	-	20	-	1.9	2.6	20	AlInGaP on GaAs
VLMK31R1S1-GS18	Red	112	142	224	20	-	630	-	20	-	1.9	2.6	20	AlInGaP on GaAs
VLMK31R1S2-GS08	Red	112	142	280	20	-	630	-	20	-	1.9	2.6	20	AlInGaP on GaAs
VLMK31R1S2-GS18	Red	112	142	280	20	-	630	-	20	-	1.9	2.6	20	AlInGaP on GaAs
VLMK31R2S2-GS08	Red	140	160	280	20	-	630	-	20	-	1.9	2.6	20	AlInGaP on GaAs
VLMK31R2S2-GS18	Red	140	160	280	20	-	630	-	20	-	1.9	2.6	20	AlInGaP on GaAs

For technical questions, contact: LED@vishay.com

THIS DOCUMENT IS SUBJECT TO CHANGE WITHOUT NOTICE. THE PRODUCTS DESCRIBED HEREIN AND THIS DOCUMENT ARE SUBJECT TO SPECIFIC DISCLAIMERS, SET FORTH AT www.vishay.com/doc?91000

ABSOLUTE MAXIMUM RATINGS (T_{amb} = 25 °C, unless otherwise specified)
VLMK31..

PARAMETER	TEST CONDITION	SYMBOL	VALUE	UNIT
Reverse voltage (1)		V_R	5	V
DC forward current	$T_{amb} \leq 85$ °C	I_F	30	mA
Surge forward current	$t_p \leq 10$ µs	I_{FSM}	0.7	A
Power dissipation		P_V	80	mW
Junction temperature		T_j	125	°C
Operating temperature range		T_{amb}	-40 to +100	°C
Storage temperature range		T_{stg}	-40 to +100	°C
Thermal resistance junction to ambient	Mounted on PC board (pad size > 16 mm²)	R_{thJA}	400	K/W

Note

(1) Driving LED in reverse direction is suitable for short term application

OPTICAL AND ELECTRICAL CHARACTERISTICS (T_{amb} = 25 °C, unless otherwise specified)
VLMK31.., RED

PARAMETER	TEST CONDITION	PART	SYMBOL	MIN.	TYP.	MAX.	UNIT
Luminous intensity (1)	I_F = 20 mA	VLMK31Q1R2	I_V	71	138	180	mcd
		VLMK31R1S1	I_V	112	142	224	mcd
		VLMK31R1S2	I_V	112	142	280	mcd
		VLMK31R2S2	I_V	140	160	280	mcd
Dominant wavelength	I_F = 20 mA		λ_d	-	630	-	nm
Peak wavelength	I_F = 20 mA		λ_p	-	643	-	nm
Angle of half intensity	I_F = 20 mA		φ	-	± 60	-	°
Forward voltage	I_F = 20 mA		V_F	-	1.9	2.6	V
Reverse voltage	I_R = 10 µA		V_R	5	-	-	V
Junction capacitance	V_R = 0 V, f = 1 MHz		C_j	-	15	-	pF

Note

(1) In one packing unit $I_{Vmax.}/I_{Vmin.} \leq 1.6$

LUMINOUS INTENSITY CLASSIFICATION

GROUP	LIGHT INTENSITY (mcd)		
STANDARD	OPTIONAL	MIN.	MAX.
Q	1	71	90
	2	90	112
R	1	112	140
	2	140	180
S	1	180	224
	2	224	280

Note

- Luminous intensity is tested at a current pulse duration of 25 ms and an accuracy of ± 11 %.
  The above type numbers represent the order groups which include only a few brightness groups. Only one group will be shipped on each reel (there will be no mixing of two groups on each reel).
  In order to ensure availability, single brightness groups will not be orderable.
  In a similar manner for colors where wavelength groups are measured and binned, single wavelength groups will be shipped on any one reel.
  In order to ensure availability, single wavelength groups will not be orderable

CROSSING TABLE

VISHAY	OSRAM
VLMK31Q1R2	LST676-Q1R2
VLMK31R1S1	LST676-R1S1
VLMK31R1S2	LST676-R1S2
VLMK31R2S2	LST676-R2S2

For technical questions, contact: LED@vishay.com

THIS DOCUMENT IS SUBJECT TO CHANGE WITHOUT NOTICE. THE PRODUCTS DESCRIBED HEREIN AND THIS DOCUMENT ARE SUBJECT TO SPECIFIC DISCLAIMERS, SET FORTH AT www.vishay.com/doc?91000

TYPICAL CHARACTERISTICS (T_{amb} = 25 °C, unless otherwise specified)

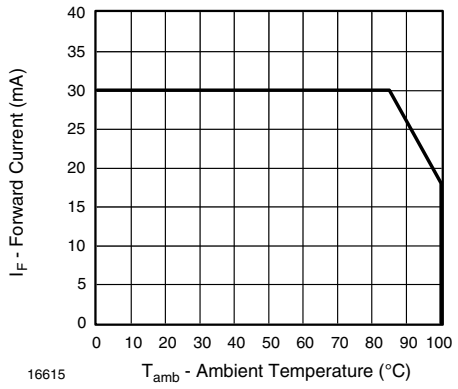

Fig. 1 - Maximum Permissible Forward Current vs. Ambient Temperature

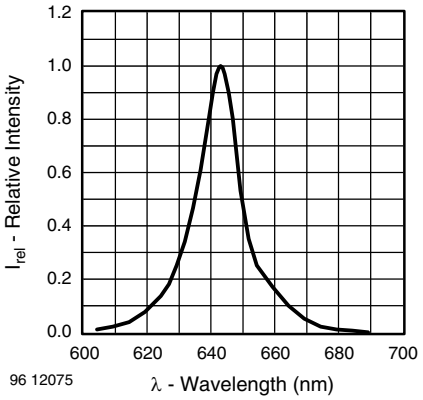

Fig. 4 - Relative Intensity vs. Wavelength

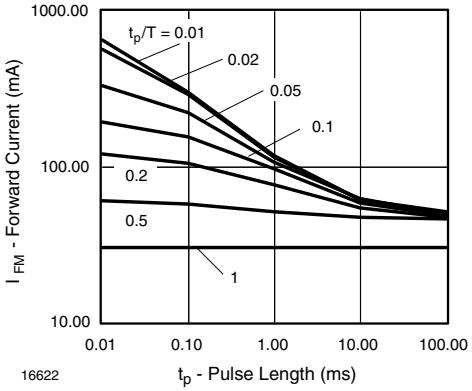

Fig. 2 - Permissible Forward Current vs. Pulse Length

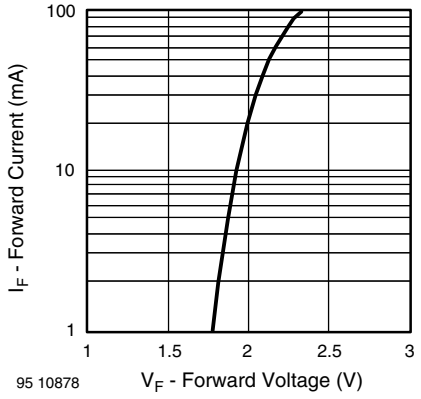

Fig. 5 - Forward Current vs. Forward Voltage

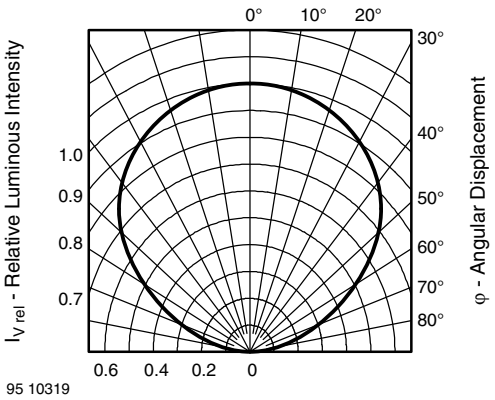

Fig. 3 - Relative Luminous Intensity vs. Angular Displacement

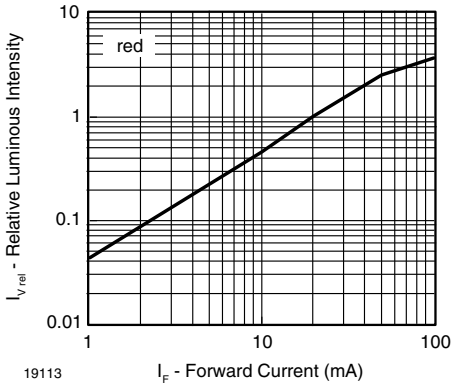

Fig. 6 - Relative Luminous Intensity vs. Forward Current

For technical questions, contact: LED@vishay.com
THIS DOCUMENT IS SUBJECT TO CHANGE WITHOUT NOTICE. THE PRODUCTS DESCRIBED HEREIN AND THIS DOCUMENT ARE SUBJECT TO SPECIFIC DISCLAIMERS, SET FORTH AT www.vishay.com/doc?91000

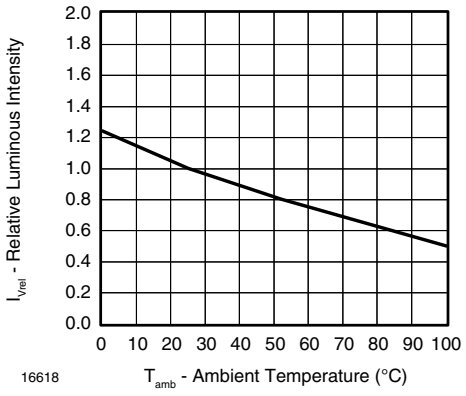

Fig. 7 - Relative Luminous Intensity vs. Ambient Temperature

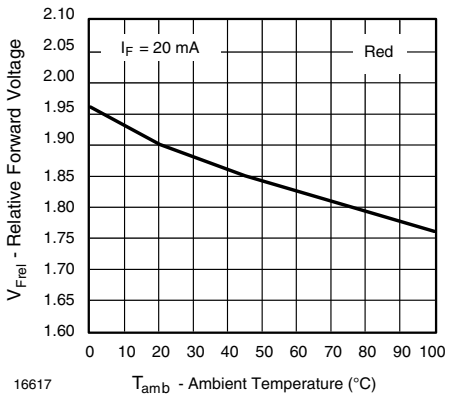

Fig. 8 - Forward Voltage vs. Ambient Temperature

PACKAGE DIMENSIONS in millimeters

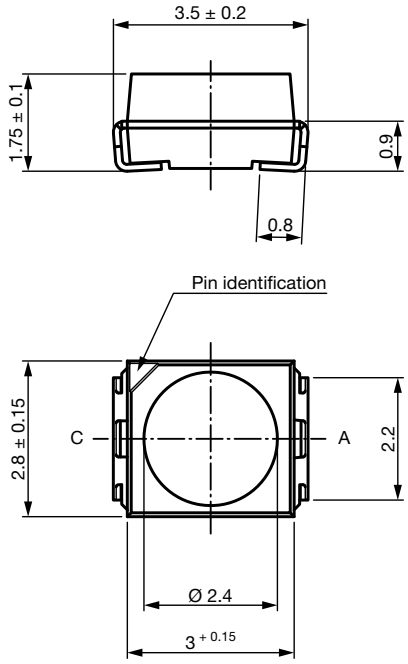

technical drawings
according to DIN
specifications

Drawing-No.: 6.541-5067.01-4
Issue: 7; 12.03.14

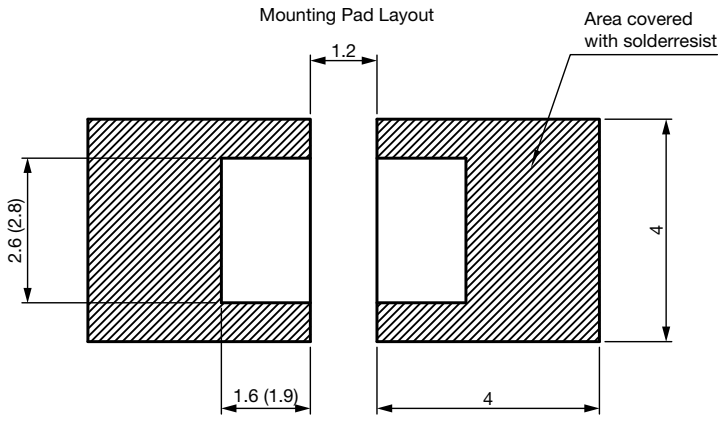

Dimensions: reflow and vapor phase (wave soldering)

For technical questions, contact: LED@vishay.com

THIS DOCUMENT IS SUBJECT TO CHANGE WITHOUT NOTICE. THE PRODUCTS DESCRIBED HEREIN AND THIS DOCUMENT ARE SUBJECT TO SPECIFIC DISCLAIMERS, SET FORTH AT www.vishay.com/doc?91000

METHOD OF TAPING / POLARITY AND TAPE AND REEL

SMD LED (VLM.3-SERIES)

Vishay's LEDs in SMD packages are available in an antistatic 8 mm blister tape (in accordance with DIN IEC 40 (CO) 564) for automatic component insertion. The blister tape is a plastic strip with impressed component cavities, covered by a top tape.

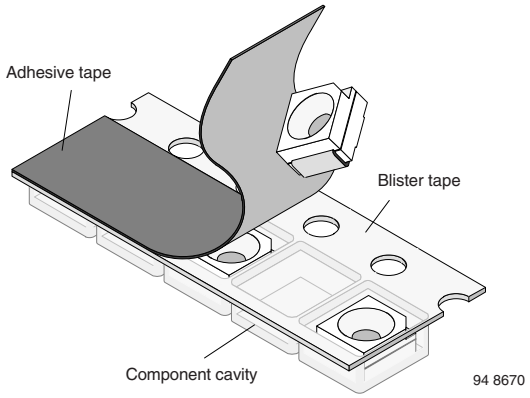

TAPING OF VLM.3...

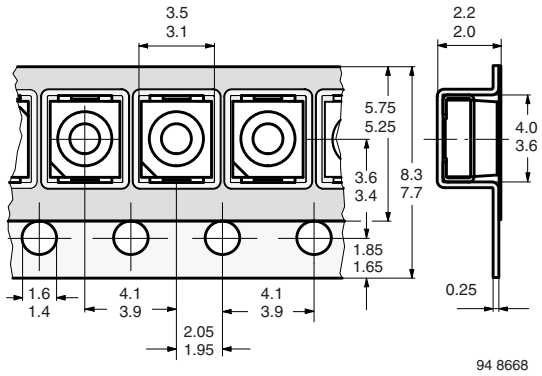

Fig. 9 - Tape Dimensions in mm for PLCC-2

REEL PACKAGE DIMENSION IN MILLIMETERS FOR SMD LEDS, TAPE OPTION GS08 (= 1500 PCS.)

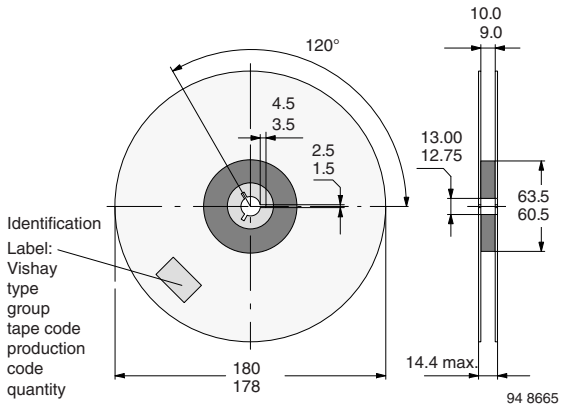

Fig. 10 - Reel Dimensions - GS08

REEL PACKAGE DIMENSION IN MILLIMETERS FOR SMD LEDS, TAPE OPTION GS18 (= 8000 PCS.) PREFERRED

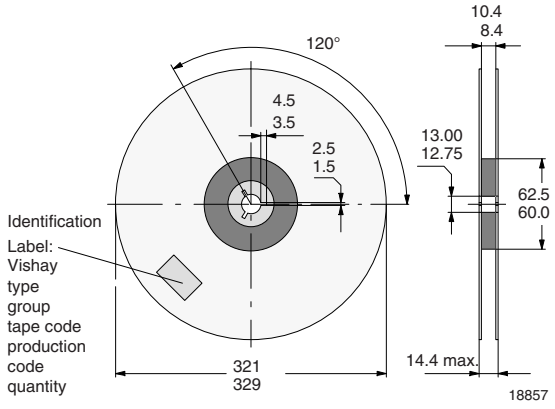

Fig. 11 - Reel Dimensions - GS18

SOLDERING PROFILE

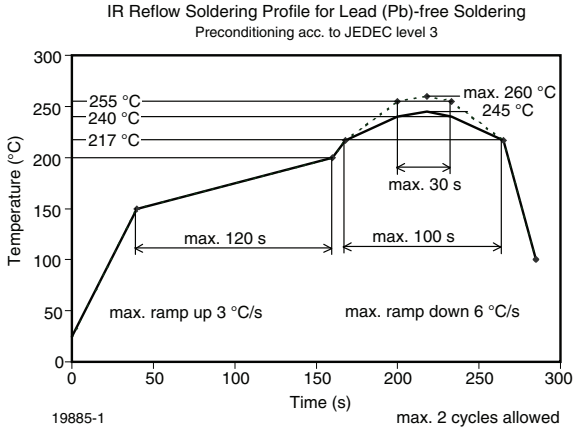

Fig. 12 - Vishay Lead (Pb)-free Reflow Soldering Profile (according to J-STD-020)

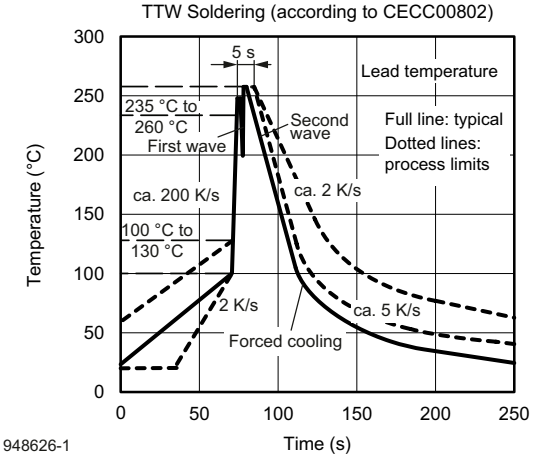

Fig. 13 - Double Wave Soldering of Opto Devices (all Packages)

For technical questions, contact: LED@vishay.com
THIS DOCUMENT IS SUBJECT TO CHANGE WITHOUT NOTICE. THE PRODUCTS DESCRIBED HEREIN AND THIS DOCUMENT ARE SUBJECT TO SPECIFIC DISCLAIMERS, SET FORTH AT www.vishay.com/doc?91000

BAR CODE PRODUCT LABEL

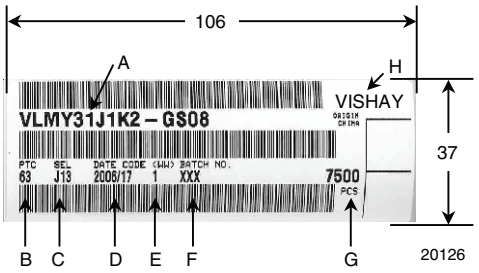

A) Type of componenent

B) Manufacturing plant

C) SEL - selection code (bin):
e.g.: J1 = code for luminous Intensity group
3 = code for color group

D) Date code year / week

E) Day code (e.g. 1: Monday)

F) Batch no.

G) Total quantity

H) Company code

DRY PACKING

The reel is packed in an anti-humidity bag to protect the devices from absorbing moisture during transportation and storage.

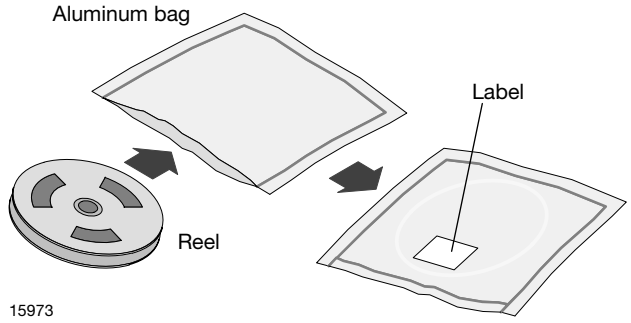

15973

FINAL PACKING

The sealed reel is packed into a cardboard box. A secondary cardboard box is used for shipping purposes.

RECOMMENDED METHOD OF STORAGE

Dry box storage is recommended as soon as the aluminum bag has been opened to prevent moisture absorption. The following conditions should be observed, if dry boxes are not available:

- Storage temperature 10 °C to 30 °C
- Storage humidity ≤ 60 % RH max.

After more than 672 h under these conditions moisture content will be too high for reflow soldering.

In case of moisture absorption, the devices will recover to the former condition by drying under the following condition:

192 h at 40 °C + 5 °C / - 0 °C and < 5 % RH (dry air / nitrogen) or
96 h at 60 °C + 5 °C and < 5 % RH for all device containers or
24 h at 100 °C + 5 °C not suitable for reel or tubes.

An EIA JEDEC standard JESD22-A112 level 2a label is included on all dry bags.

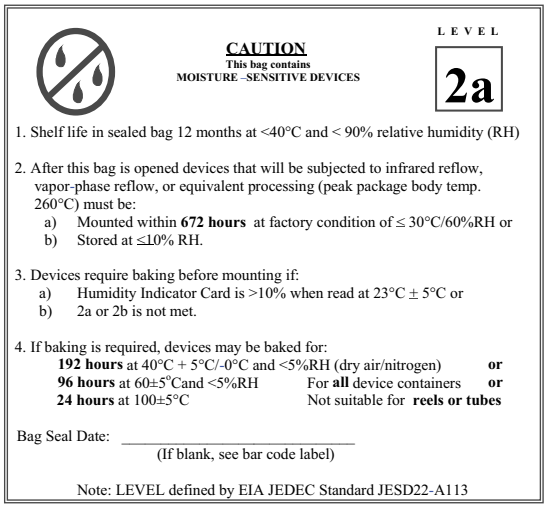

CAUTION
This bag contains
MOISTURE –SENSITIVE DEVICES

LEVEL
2a

1. Shelf life in sealed bag 12 months at <40°C and < 90% relative humidity (RH)

2. After this bag is opened devices that will be subjected to infrared reflow, vapor-phase reflow, or equivalent processing (peak package body temp. 260°C) must be:
   a) Mounted within **672 hours** at factory condition of ≤ 30°C/60%RH or
   b) Stored at ≤10% RH.

3. Devices require baking before mounting if:
   a) Humidity Indicator Card is >10% when read at 23°C ± 5°C or
   b) 2a or 2b is not met.

4. If baking is required, devices may be baked for:
   192 hours at 40°C + 5°C/-0°C and <5%RH (dry air/nitrogen) **or**
   96 hours at 60±5°Cand <5%RH For **all** device containers **or**
   24 hours at 100±5°C Not suitable for **reels or tubes**

Bag Seal Date: _____
(If blank, see bar code label)

Note: LEVEL defined by EIA JEDEC Standard JESD22-A113

19786

Example of JESD22-A112 Level 2a Label

ESD PRECAUTION

Proper storage and handling procedures should be followed to prevent ESD damage to the devices especially when they are removed from the antistatic shielding bag. Electrostatic sensitive devices warning labels are on the packaging.

VISHAY SEMICONDUCTORS STANDARD BAR CODE LABELS

The Vishay Semiconductors standard bar code labels are printed at final packing areas. The labels are on each packing unit and contain Vishay Semiconductors specific data.

For technical questions, contact: LED@vishay.com

THIS DOCUMENT IS SUBJECT TO CHANGE WITHOUT NOTICE. THE PRODUCTS DESCRIBED HEREIN AND THIS DOCUMENT ARE SUBJECT TO SPECIFIC DISCLAIMERS, SET FORTH AT www.vishay.com/doc?91000

Disclaimer

ALL PRODUCT, PRODUCT SPECIFICATIONS AND DATA ARE SUBJECT TO CHANGE WITHOUT NOTICE TO IMPROVE RELIABILITY, FUNCTION OR DESIGN OR OTHERWISE.

Vishay Intertechnology, Inc., its affiliates, agents, and employees, and all persons acting on its or their behalf (collectively, “Vishay”), disclaim any and all liability for any errors, inaccuracies or incompleteness contained in any datasheet or in any other disclosure relating to any product.

Vishay makes no warranty, representation or guarantee regarding the suitability of the products for any particular purpose or the continuing production of any product. To the maximum extent permitted by applicable law, Vishay disclaims (i) any and all liability arising out of the application or use of any product, (ii) any and all liability, including without limitation special, consequential or incidental damages, and (iii) any and all implied warranties, including warranties of fitness for particular purpose, non-infringement and merchantability.

Statements regarding the suitability of products for certain types of applications are based on Vishay's knowledge of typical requirements that are often placed on Vishay products in generic applications. Such statements are not binding statements about the suitability of products for a particular application. It is the customer's responsibility to validate that a particular product with the properties described in the product specification is suitable for use in a particular application. Parameters provided in datasheets and / or specifications may vary in different applications and performance may vary over time. All operating parameters, including typical parameters, must be validated for each customer application by the customer's technical experts. Product specifications do not expand or otherwise modify Vishay's terms and conditions of purchase, including but not limited to the warranty expressed therein.

Hyperlinks included in this datasheet may direct users to third-party websites. These links are provided as a convenience and for informational purposes only. Inclusion of these hyperlinks does not constitute an endorsement or an approval by Vishay of any of the products, services or opinions of the corporation, organization or individual associated with the third-party website. Vishay disclaims any and all liability and bears no responsibility for the accuracy, legality or content of the third-party website or for that of subsequent links.

Except as expressly indicated in writing, Vishay products are not designed for use in medical, life-saving, or life-sustaining applications or for any other application in which the failure of the Vishay product could result in personal injury or death. Customers using or selling Vishay products not expressly indicated for use in such applications do so at their own risk. Please contact authorized Vishay personnel to obtain written terms and conditions regarding products designed for such applications.

No license, express or implied, by estoppel or otherwise, to any intellectual property rights is granted by this document or by any conduct of Vishay. Product names and markings noted herein may be trademarks of their respective owners.

© 2022 VISHAY INTERTECHNOLOGY, INC. ALL RIGHTS RESERVED