VLA307-02R

ISOLATED TYPE DC-DC CONVERTER

DESCRIPTION

The VLA307-02R is an isolated DC-DC converter designed to control the industrial equipment. It can convert the high voltage to low voltage 2 outputs. Total output power is 11.2W.

FEATURES

- Input ---------- DC220V to 380V DC
- Output---------- +24V, 400mA (9.6W)
  +8V, 200mA (1.6W)
- Electrical isolation (between input and outputs)
  ---------- 1500Vrms 1 minute

APPLICATIONS

On board power supply for control equipment

OUTLINE DRAWING

Dimensions : mm

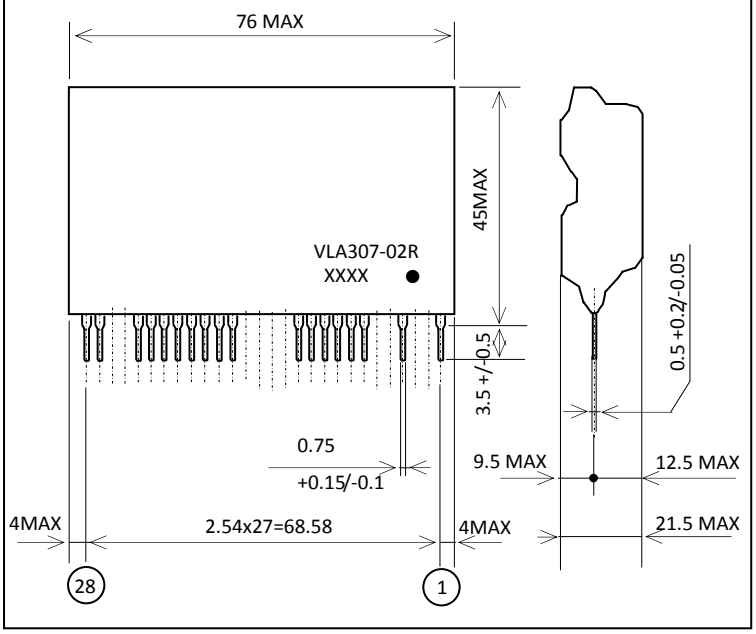

BLOCK DIAGRAM

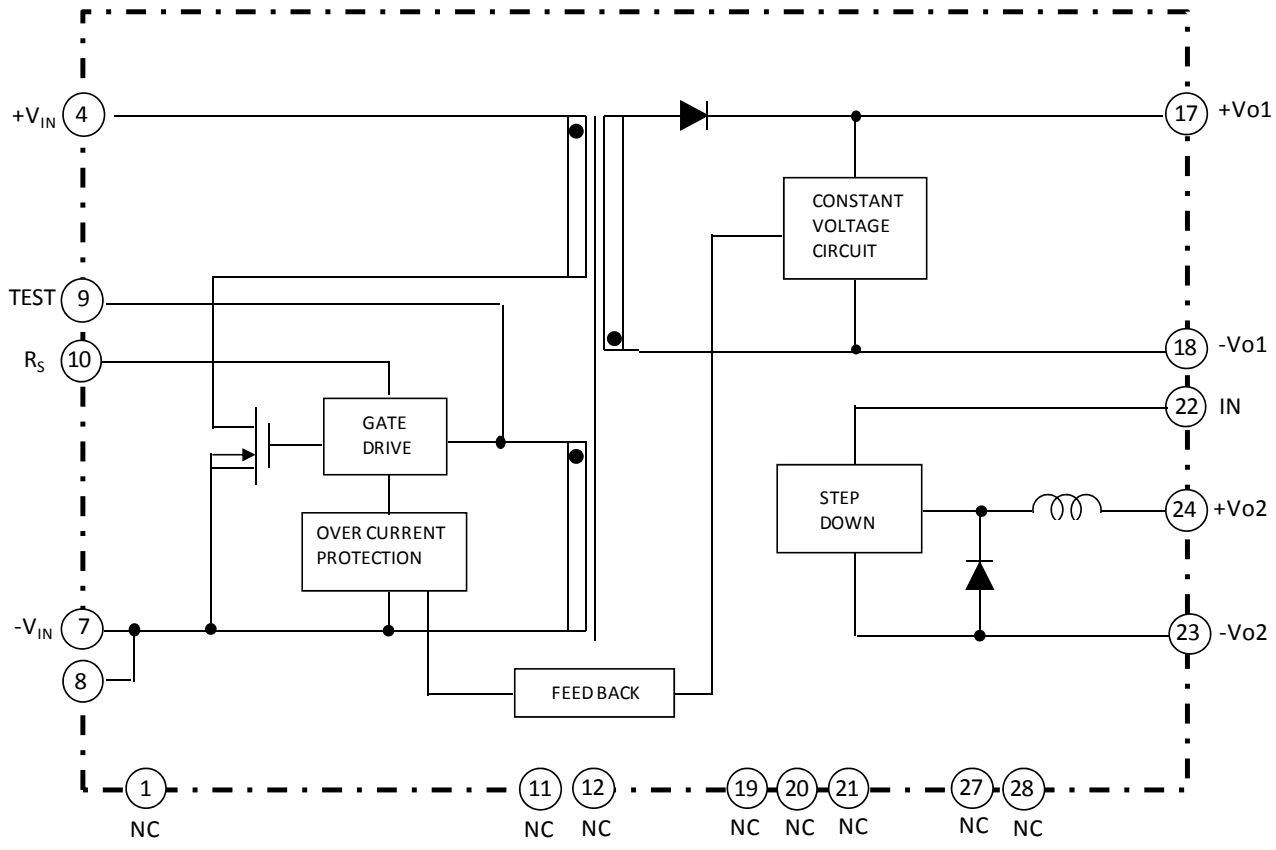

MAXIMUM RATINGS (unless otherwise noted, Ta=25°C)

Symbol	Parameter	Conditions	Ratings	Unit
V_{IN}	Input voltage	Between pins 4 - 7,8	380	V
I_{O1}	Output current 1	Between pins 17 - 18,23	400	mA
I_{O2}	Output current 2	Between pins 24 - 18,23	200	
Topr	Operating temperature	No condensation (*1)	-20 ~ +60	°C
Tstg	Storage temperature	No condensation	-20 ~ +80	°C
Viso	Electrical isolation between input and output 1	Sine wave voltage, 60Hz, 1min	1500	Vrms

(*1) Please refer to de-rating characteristics.

ELECTRICAL CHARACTERISTICS (unless otherwise noted, V_{IN}=310V, Ta=25°C)

Symbol	Parameter	Test conditions	Limits			Unit
			Min.	Typ.	Max.	
V_{IN}	Input voltage	Recommended range	220	310	380	V
Vo1	Output voltage 1	Io1=0 ~ 400mA	22.8	24.0	25.2	V
Vo2	Output voltage 2	Io2=0 ~ 200mA	7.6	8.0	8.4	V
Reg_{-I1}	Input regulation 1	Io1=400mA, Io2=200mA V_{IN}=220~380V	-	-	480	mV
Reg_{-I2}	Input regulation 2		-	-	160	mV
Reg_{-L1}	Load regulation 1	Io1=0~400mA, Io2=0~200mA	-	-	720	mV
Reg_{-L2}	Load regulation 2		-	-	240	mV
Vp-p1	Ripple voltage 1	Io1=400mA, Io2=200mA	-	500	-	mV
Vp-p2	Ripple voltage 2		-	100	-	mV
η	Efficiency	Io1=400mA, Io2=200mA	-	78	-	%

TEST CIRCUIT DIAGRAM

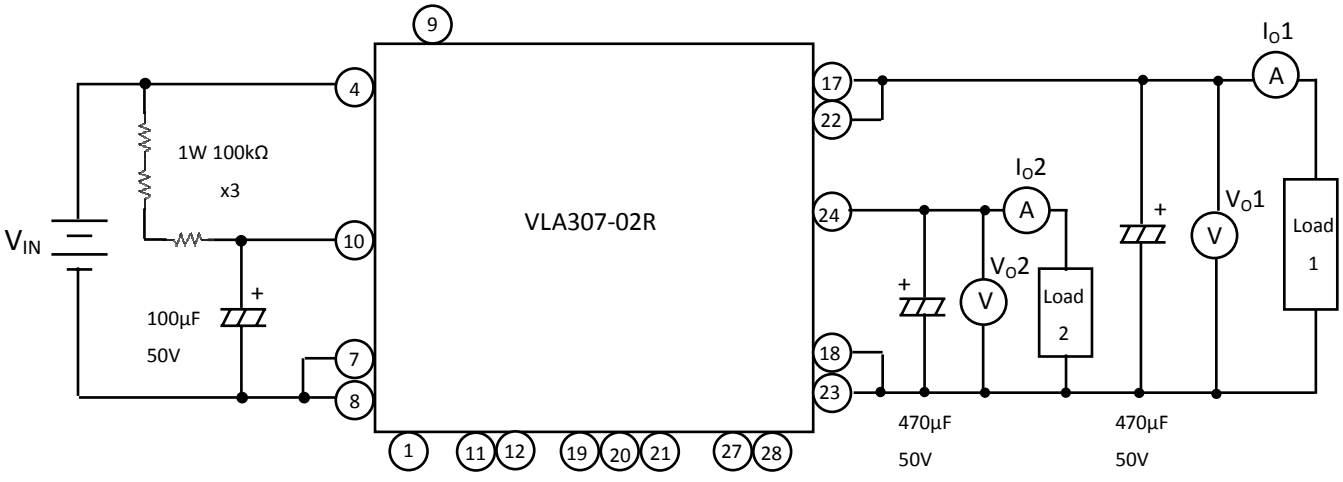

It is used the electrolytic capacitors which has the low impedance for output capacitor.

FOR SAFETY USING

Great detail and careful attention are given to the production activity of Hics, such as the development, the quality of production, and in it's reliability. However the reliability of Hics depends not only on their own factors but also in their condition of usage. When handling Hics, please note the following cautions.

CAUTIONS	
Packing	The materials used in packing Hics can only withstand normal external conditions. When exposed to outside shocks, rain and certain environmental contaminators, the packing materials will deteriorates. Please take care in handling.
Carrying	1) Don't stack boxes too high. Avoid placing heavy materials on boxes. 2) Boxes must be positioned correctly during transportation to avoid breakage. 3) Don't throw or drop boxes. 4) Keep boxes dry. Avoid rain or snow. 5) Minimal vibration and shock during transportation is desirable.
Storage	When storing Hics, please observe the following notices or possible deterioration of their electrical characteristics, risk of solderability, and external damage may occur. 1) Devices must be stored where fluctuation of temperature and humidity is minimal, and must not be exposed to direct sunlight. Store at the normal temperature of 5 to 30 degrees Celsius with humidity at 40 to 60%. 2) Avoid locations where corrosive gasses are generated or where much dust accumulates. 3) Storage cases must be static proof. 4) Avoid putting weight on boxes.
Extended storage	When extended storage is necessary, Hics must be kept non-processed. When using Hics which have been stored for more than one year or under severe conditions, be sure to check that the exterior is free from flaw and other damages.
Maximum ratings	To prevent any electrical damages, use Hics within the maximum ratings. The temperature, current, voltage, etc. must not exceed these conditions.
Polarity	To protect Hics from destruction and deterioration due to wrong insertion, make sure of polarity in inserting leads into the board holes, conforming to the external view for the terminal arrangement.

ISAHAYA ELECTRONICS CORPORATION
Marketing division, Marketing planning department
6-41 Tsukuba, Isahaya, Nagasaki, 854-0065 Japan

Keep safety first in your circuit designs!

- ISAHAYA Electronics Corporation puts the maximum effort into making semiconductor products better and more reliable, but there is always the possibility that trouble may occur with them. Trouble with semiconductors may lead to personal injury, fire or property damage. Remember to give due consideration to safety when making your circuit designs, with appropriate measures such as (1)placement of substitutive, auxiliary circuits, (2)use of non-flammable material or (3)prevention against any malfunction or mishap.

Notes regarding these materials

- These materials are intended as a reference to our customers in the selection of the ISAHAYA products best suited to the customer's application; they don't convey any license under any intellectual property rights, or any other rights, belonging to ISAHAYA Electronics Corporation or a third party.
- ISAHAYA Electronics Corporation assumes no responsibility for any damage, or infringement of any third party's rights, originating in the use of any product data, diagrams, charts or circuit application examples contained in these materials.
- All information contained in these materials, including product data, diagrams and charts, represent information on products at the time of publication of these materials, and are subject to change by ISAHAYA Electronics Corporation without notice due to product improvements or other reasons. It is therefore recommended that customers contact ISAHAYA Electronics Corporation or an authorized ISAHAYA products distributor for the latest product information before purchasing a product listed herein.
- ISAHAYA Electronics Corporation products are not designed or manufactured for use in a device or system that is used under circumstances in which human life is potentially at stake. Please contact ISAHAYA Electronics Corporation or an authorized ISAHAYA products distributor when considering the use of a product contained herein for any specific purposes, such as apparatus or systems for transportation, vehicular, medical, aerospace, nuclear, or undersea repeater use.
- The prior written approval of ISAHAYA Electronics Corporation is necessary to reprint or reproduce in whole or in part these materials.
- If these products or technologies are subject to the Japanese export control restrictions, they must be exported under a license from the Japanese government and cannot be imported into a country other than the approved destination.
  Any diversion or re-export contrary to the export control laws and regulations of Japan and/or the country of destination is prohibited.
- Please contact ISAHAYA Electronics Corporation or an authorized ISAHAYA products distributor for further details on these materials or the products contained therein.