Dual Low-Voltage Trench MOS Barrier Schottky Rectifier

Ultra Low V_F = 0.33 V at I_F = 5.0 A

TMBS®

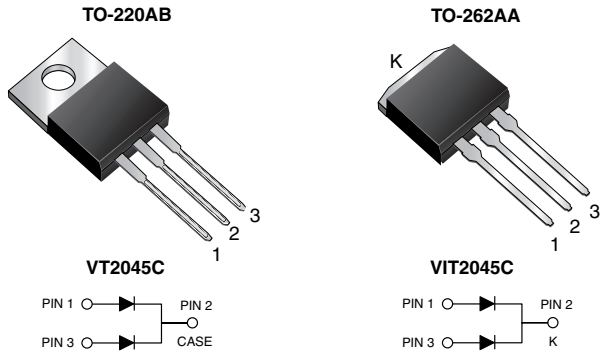

FEATURES

- Trench MOS Schottky technology
- Low forward voltage drop, low power losses
- High efficiency operation
- Solder dip 275 °C max. 10 s, per JESD 22-B106
- AEC-Q101 qualified
- Material categorization: For definitions of compliance please see www.vishay.com/doc?99912

RoHS COMPLIANT
HALOGEN FREE

TYPICAL APPLICATIONS

For use in high frequency DC/DC converters, switching power supplies, freewheeling diodes, OR-ing diode, and reverse battery protection.

MECHANICAL DATA

Case: TO-220AB and TO-262AA
Molding compound meets UL 94 V-0 flammability rating
Base P/N-M3 - halogen-free, RoHS-compliant, and commercial grade
Base P/NHM3 - halogen-free, RoHS-compliant, and AEC-Q101 qualified

Terminals: Matte tin plated leads, solderable per J-STD-002 and JESD 22-B102
M3 suffix meets JESD 201 class 1A whisker test, HM3 suffix meets JESD 201 class 2 whisker test

Polarity: As marked

Mounting Torque: 10 in-lbs maximum

PRIMARY CHARACTERISTICS	
$I_{F(AV)}$	2 x 10 A
V_{RRM}	45 V
I_{FSM}	160 A
V_F at I_F = 10 A	0.41 V
T_J max.	150 °C
Package	TO-220AB, TO-262AA
Diode variations	Dual common cathode

MAXIMUM RATINGS (T_A = 25 °C unless otherwise noted)

PARAMETER		SYMBOL	VT2045C	VIT2045C	UNIT
Maximum repetitive peak reverse voltage		V_{RRM}	45		V
Maximum average forward rectified current (fig. 1)	per device	$I_{F(AV)}$	20		A
	per diode		10		
Peak forward surge current 8.3 ms single half sine-wave superimposed on rated load per diode		I_{FSM}	160		A
Operating junction and storage temperature range		T_J, T_{STG}	-40 to +150		°C

For technical questions within your region: DiodesAmericas@vishay.com, DiodesAsia@vishay.com, DiodesEurope@vishay.com
THIS DOCUMENT IS SUBJECT TO CHANGE WITHOUT NOTICE. THE PRODUCTS DESCRIBED HEREIN AND THIS DOCUMENT ARE SUBJECT TO SPECIFIC DISCLAIMERS, SET FORTH AT www.vishay.com/doc?91000

ELECTRICAL CHARACTERISTICS (T_A = 25 °C unless otherwise noted)						
PARAMETER	**TEST CONDITIONS**		**SYMBOL**	**TYP.**	**MAX.**	**UNIT**
Instantaneous forward voltage per diode	I_F = 5 A	T_A = 25 °C	V_F (1)	0.44	-	V
	I_F = 10 A			0.49	0.58	
	I_F = 5 A	T_A = 125 °C		0.33	-	
	I_F = 10 A			0.41	0.52	
Reverse current per diode	V_R = 45 V	T_A = 25 °C	I_R (2)	-	2000	µA
		T_A = 125 °C		10	30	mA

Notes
(1) Pulse test: 300 µs pulse width, 1 % duty cycle
(2) Pulse test: Pulse width ≤ 40 ms

THERMAL CHARACTERISTICS (T_A = 25 °C unless otherwise noted)					
PARAMETER		**SYMBOL**	**VT2045C**	**VIT2045C**	**UNIT**
Typical thermal resistance	per diode	$R_{\theta JC}$	3.0		°C/W
	per device		2.0		

ORDERING INFORMATION (Example)					
PACKAGE	**PREFERRED P/N**	**UNIT WEIGHT (g)**	**PACKAGE CODE**	**BASE QUANTITY**	**DELIVERY MODE**
TO-220AB	VT2045C-M3/4W	1.88	4W	50/tube	Tube
TO-262AA	VIT2045C-M3/4W	1.45	4W	50/tube	Tube
TO-220AB	VT2045CHM3/4W (1)	1.88	4W	50/tube	Tube
TO-262AA	VIT2045CHM3/4W (1)	1.45	4W	50/tube	Tube

Note
(1) AEC-Q101 qualified

RATINGS AND CHARACTERISTICS CURVES (T_A = 25 °C unless otherwise noted)

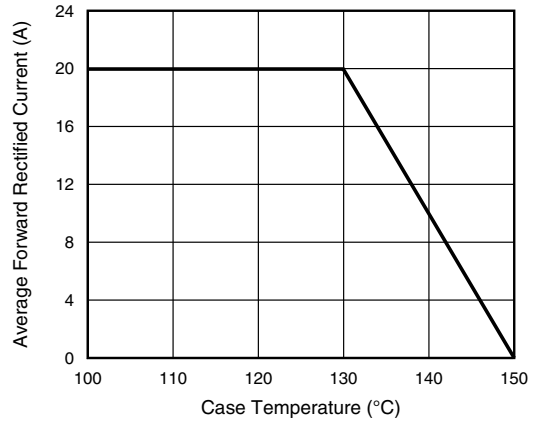

Fig. 1 - Maximum Forward Current Derating Curve

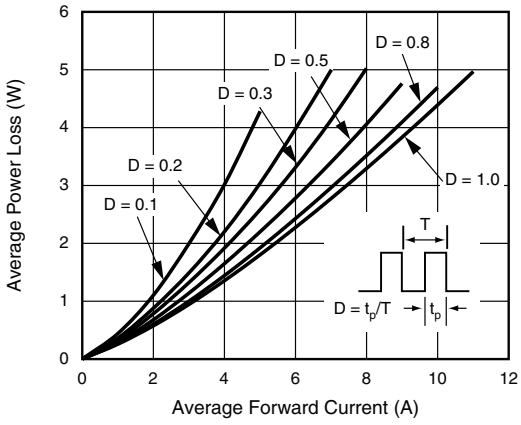

Fig. 2 - Forward Power Loss Characteristics Per Diode

For technical questions within your region: DiodesAmericas@vishay.com, DiodesAsia@vishay.com, DiodesEurope@vishay.com
THIS DOCUMENT IS SUBJECT TO CHANGE WITHOUT NOTICE. THE PRODUCTS DESCRIBED HEREIN AND THIS DOCUMENT ARE SUBJECT TO SPECIFIC DISCLAIMERS, SET FORTH AT www.vishay.com/doc?91000

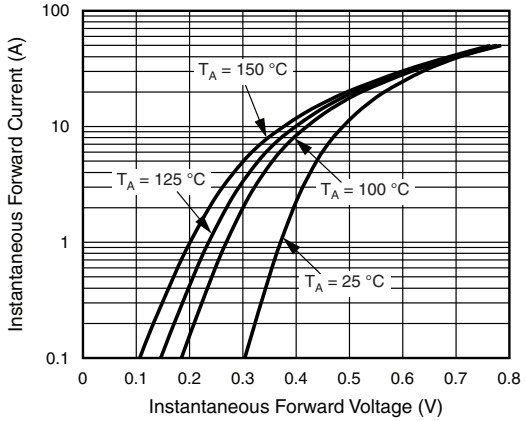

Fig. 3 - Typical Instantaneous Forward Characteristics Per Diode

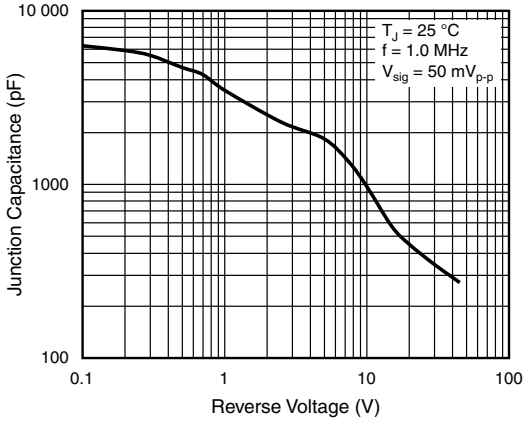

Fig. 5 - Typical Junction Capacitance Per Diode

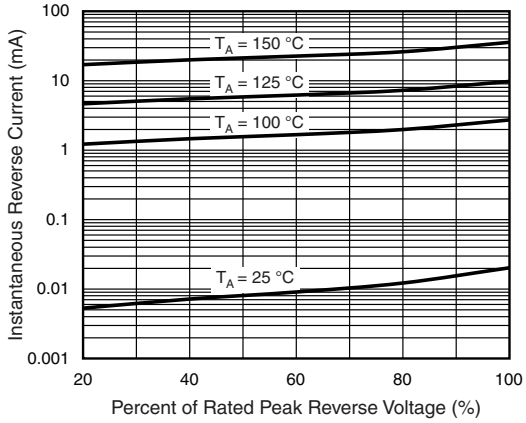

Fig. 4 - Typical Reverse Characteristics Per Diode

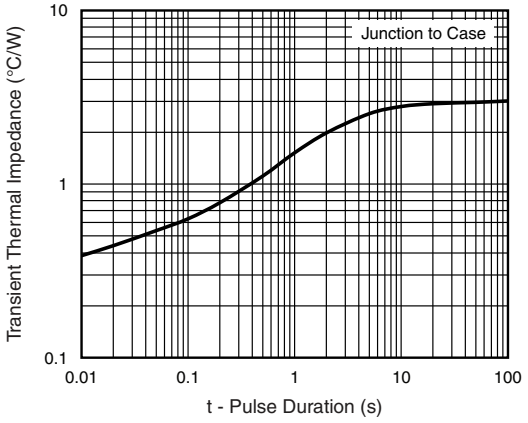

Fig. 6 - Typical Transient Thermal Impedance Per Diode

For technical questions within your region: DiodesAmericas@vishay.com, DiodesAsia@vishay.com, DiodesEurope@vishay.com
THIS DOCUMENT IS SUBJECT TO CHANGE WITHOUT NOTICE. THE PRODUCTS DESCRIBED HEREIN AND THIS DOCUMENT ARE SUBJECT TO SPECIFIC DISCLAIMERS, SET FORTH AT www.vishay.com/doc?91000

PACKAGE OUTLINE DIMENSIONS in inches (millimeters)

TO-220AB

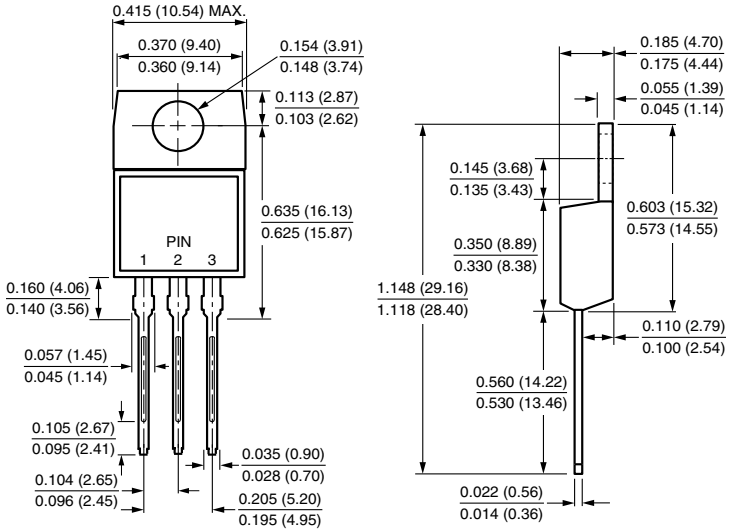

TO-262AA

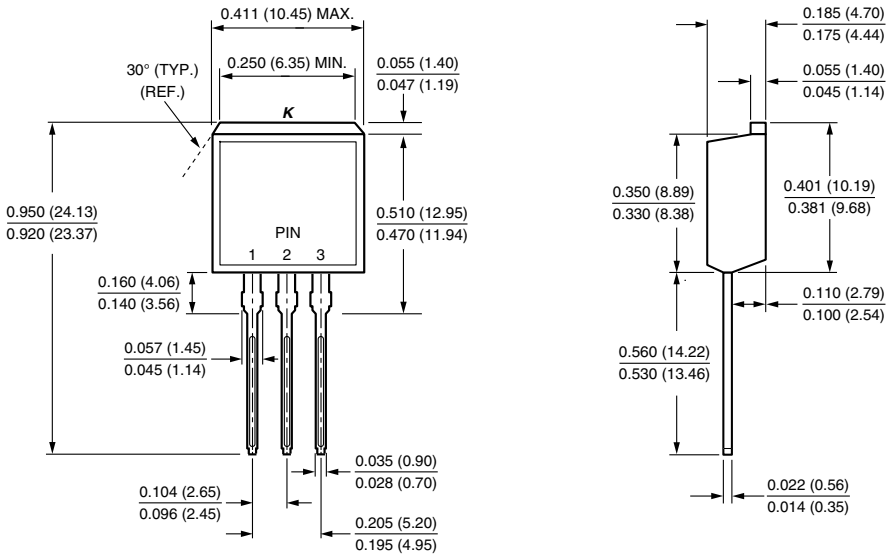

For technical questions within your region: DiodesAmericas@vishay.com, DiodesAsia@vishay.com, DiodesEurope@vishay.com
THIS DOCUMENT IS SUBJECT TO CHANGE WITHOUT NOTICE. THE PRODUCTS DESCRIBED HEREIN AND THIS DOCUMENT ARE SUBJECT TO SPECIFIC DISCLAIMERS, SET FORTH AT www.vishay.com/doc?91000

Disclaimer

ALL PRODUCT, PRODUCT SPECIFICATIONS AND DATA ARE SUBJECT TO CHANGE WITHOUT NOTICE TO IMPROVE RELIABILITY, FUNCTION OR DESIGN OR OTHERWISE.

Vishay Intertechnology, Inc., its affiliates, agents, and employees, and all persons acting on its or their behalf (collectively, “Vishay”), disclaim any and all liability for any errors, inaccuracies or incompleteness contained in any datasheet or in any other disclosure relating to any product.

Vishay makes no warranty, representation or guarantee regarding the suitability of the products for any particular purpose or the continuing production of any product. To the maximum extent permitted by applicable law, Vishay disclaims (i) any and all liability arising out of the application or use of any product, (ii) any and all liability, including without limitation special, consequential or incidental damages, and (iii) any and all implied warranties, including warranties of fitness for particular purpose, non-infringement and merchantability.

Statements regarding the suitability of products for certain types of applications are based on Vishay’s knowledge of typical requirements that are often placed on Vishay products in generic applications. Such statements are not binding statements about the suitability of products for a particular application. It is the customer’s responsibility to validate that a particular product with the properties described in the product specification is suitable for use in a particular application. Parameters provided in datasheets and/or specifications may vary in different applications and performance may vary over time. All operating parameters, including typical parameters, must be validated for each customer application by the customer’s technical experts. Product specifications do not expand or otherwise modify Vishay’s terms and conditions of purchase, including but not limited to the warranty expressed therein.

Except as expressly indicated in writing, Vishay products are not designed for use in medical, life-saving, or life-sustaining applications or for any other application in which the failure of the Vishay product could result in personal injury or death. Customers using or selling Vishay products not expressly indicated for use in such applications do so at their own risk. Please contact authorized Vishay personnel to obtain written terms and conditions regarding products designed for such applications.

No license, express or implied, by estoppel or otherwise, to any intellectual property rights is granted by this document or by any conduct of Vishay. Product names and markings noted herein may be trademarks of their respective owners.

Material Category Policy

Vishay Intertechnology, Inc. hereby certifies that all its products that are identified as RoHS-Compliant fulfill the definitions and restrictions defined under Directive 2011/65/EU of The European Parliament and of the Council of June 8, 2011 on the restriction of the use of certain hazardous substances in electrical and electronic equipment (EEE) - recast, unless otherwise specified as non-compliant.

Please note that some Vishay documentation may still make reference to RoHS Directive 2002/95/EC. We confirm that all the products identified as being compliant to Directive 2002/95/EC conform to Directive 2011/65/EU.

Vishay Intertechnology, Inc. hereby certifies that all its products that are identified as Halogen-Free follow Halogen-Free requirements as per JEDEC JS709A standards. Please note that some Vishay documentation may still make reference to the IEC 61249-2-21 definition. We confirm that all the products identified as being compliant to IEC 61249-2-21 conform to JEDEC JS709A standards.

Mouser Electronics

Authorized Distributor

Click to View Pricing, Inventory, Delivery & Lifecycle Information:

Vishay:
VIT2045C-M3/4W VIT2045CBP-M3/4W VT2045C-M3/4W