VIA

VIPRO VP7910

Fanless quad-core panel PC with 10.4" resistive or prejective capacitive touch screen



Features

- Fanless VIA Eden® X4 quad-core processor
- Supports 5-wire resistive touch sensor or projective capacitive multi-touch
- Supports one mSATA and one hard disk drive bay
- Supports two minPCIe slots and two SIM card slots for 3G/ Wi-Fi communication
- Front panel IP65 compliant against water and dust

CE FC

Specifications

Model Name		VP-7910-R1Q12A1	VP-7910-P1Q12A1
Processor		1.2GHz VIA Eden® X4	1.2GHz VIA Eden® X4
Chipset		VIA VX11H Media System Processor	
BIOS		AMI Aptio UEFI BIOS, 32Mbit Flash memory	
System Memory		1 DDR3 SODIMM socket, up to 8GB memory size Pre-assembled 2GB SDRAM	
Storage		Supports 1 2.5" SATA SSD/HDD 1 mSATA slot	
Graphics		Integrated VIA C-640 DX11 2D/3D graphics with MPEG-2, WMV9, VC1 and H.264 video decoding acceleration	
Audio		VIA VT2021 High Definition Audio Codec	
LCD Display	LCD Type	10.4" color TFT LCD	
	LCD MTBF	30,000 hrs	50,000 hrs
	Contrast Ratio	500:1	1400:1
	Luminance (cd/m^2)	230	400
	Viewing Angle (H/V°)	80°(left), 80°(right), 60°(up), 70°(down)	89°(left), 89°(right), 89°(up), 89°(down)
	Pixel Pitch (mm)	0.264 x 0.264	0.2055 x 0.2055
	Max. Colors	16.2M	16.2M
	Max. Resolution	800 x 600	1024 x 768
Touch Screen	Touch Type	5-wire Analog Resistive	Projective Capacitive multi-touch
	Light Transmission	80% ± 3%	≥85%
	Controller	USB interface	USB interface
USB		2 USB 3.0 ports and 2 USB 2.0 host ports	
LAN		VIA VT6130 PCIe Gigabit Ethernet controller Realtek RTL8111G PCIe Gigabit Ethernet controller Supports Wake On LAN (WOL) Supports Preboot Execution Environment (PXE) 1x6 pin connector reserved to support VIA EMIO-1533 USB Wi-Fi module	
COM		Fintek F81865	
Expansion I/O		2 miniPCIe slots (supports 2 SIM slots) Supports 3 external antenna for optional Wi-Fi, 3G, and GPS modules	
Bottom Panel I/O		1 Mini HDMI port 1 VGA port 2 USB 3.0 ports 2 USB 2.0 ports 2 Gigabit Ethernet ports 3 Audio jacks: Line-in, Line-out and Mic-in 1 Power on/off button 1 Red color LED for HDD activity 1 Green color LED for power status 1 2-pole Phoenix DC jack	
Right Panel I/O		1 DIO port for 8-bit GPIO (4 GPI + 4 GPO) 3 COM ports for RS-232/422/485 (powered by selectable 5V/12V)	
Power Supply		9V ~ 32V DC-in (typical 29W) Supports over voltage, over current, and under voltage protection	

Right Panel External I/O

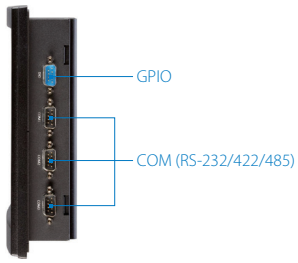

Bottom Panel External I/O

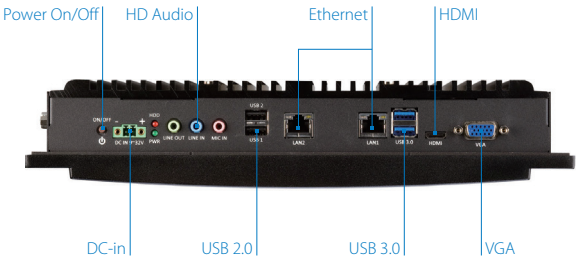

Specifications

Part Number	VP-7910-R1Q12A1	VP-7910-P1Q12A1
Operating System	Windows 10/8.1/8/7, Win 10 IoT, WES 7, Linux	
VIA Smart ETK	BIOS flash tool, Hardware monitor, LCD backlight brightness control, Watchdog timer, GPIO	
Operating Temperature	-10°C ~ 50°C: with qualified industrial grade DRAM, flash disk drive 0°C ~ 50°C: with default built in DRAM 0°C ~ 45°C: with 2.5" hard disk drive	
Operating Humidity	10% ~ 90% @ 45°C (non-condensing)	
Storage Temperature	-10°C ~ 70°C	
Vibration Loading During Operation	With mSATA flash: 5Grms, IEC 60068-2-64, random, 5 ~ 500Hz, 1hr/axis	
Shock During Operation	With mSATA flash: 50G, IEC 60068-2-27, half sine, 11ms duration	
Mechanical Construction	Aluminum mixed with heavy-duty steel	
Mounting	Panel mount/Wall/VESA mountable	
Dimensions	300.4mm(W) x 58.6mm(H) x 205.9mm(D) (11.8" x 2.3" x 8.1")	
Weight	3.6kg (7.9lbs)	
Compliance	CE/FCC/CCC	

Ordering Information

Part Number	CPU Frequency	Description
VP-7910-R1Q12A1	VIA Eden® X4 @ 1.2GHz	1.2GHz VIA Eden® X4 CPU based fanless 10.4" Resistive touch panel system with 800 x 600 LCD, pre-assembled 2GB SDRAM, HDMI, VGA, 2 USB 3.0, 2 USB 2.0, 3 COM, DIO, 2 Gigabit Ethernet, 2 miniPCIe slots, SATA, mSATA, panel mount bracket, 9~32V DC-in
VP-7910-P1Q12A1	VIA Eden® X4 @ 1.2GHz	1.2GHz VIA Eden® X4 CPU based fanless 10.4" Projective Capacitive touch panel system with 1024 x 768 LCD, pre-assembled 2GB SDRAM, HDMI, VGA, 2 USB 3.0, 2 USB 2.0, 3 COM, DIO, 2 Gigabit Ethernet, 2 miniPCIe slots, SATA, mSATA, panel mount bracket, 9~32V DC-in

Optional Accessories

External AC-to-DC Adapter and Power Cord

Part Number	Description
99G63-020316	AC-to-DC adapter, 2-pole Phoenix connector, DC 12V/5A, 60W
99G33-02032C	Power cord, 180cm, USA type
99G33-02033C	Power cord, 180cm, Europe type

Wireless Accesories

Part Number	Description
00GO27100BU2B0D0	VNT9271 IEEE 802.11 b/g/n USB Wi-Fi dongle
EMIO-1533-00A2	VNT9271 IEEE 802.11 b/g/n USB Wi-Fi module with assembly kit and antenna
EMIO-5531-00A1	VAB-820-W IEEE 802.11b/g/n USB Wi-Fi & Bluetooth module with assembly kit and antenna
EMIO-2531-00A1	VAB-820-W-M IEEE 802.11b/g/n miniPCIe Wi-Fi & Bluetooth module with assembly kit and antenna
EMIO-2550-00A1	3.75G HSPA/UMTS mobile broadband full size miniPCIe module with GPS, SIM card slot, assembly kit and antenna

Dimensions

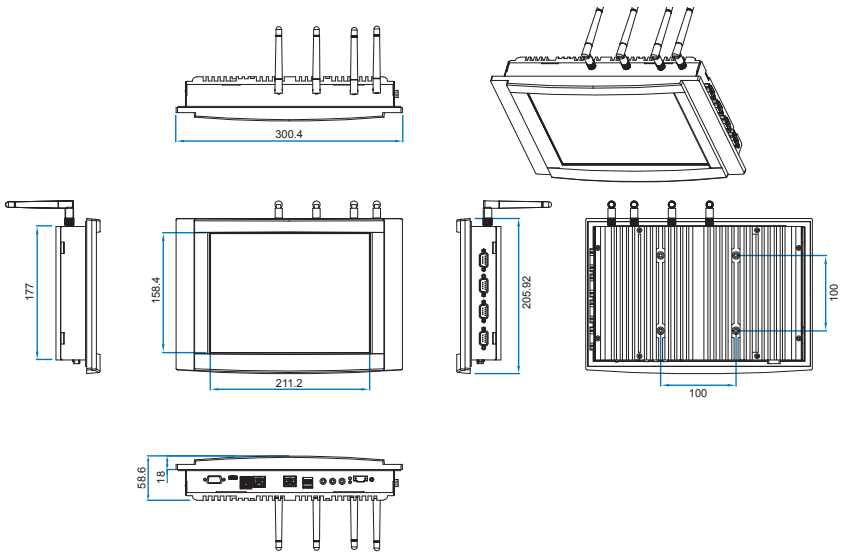

Packing List

Items
VIPRO VP7910
Phoenix plug to DC jack
Panel mounting bracket
Screw pack for VESA mounitng