VIPer26K

1050 V High voltage converter

Data brief

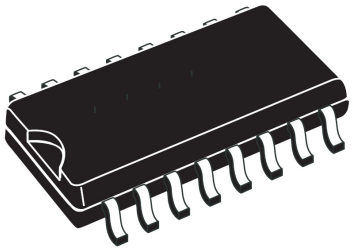

SO16 narrow

Features

- 1050 V avalanche rugged power section
- Current mode PWM controller
- Embedded high voltage startup and sense FET
- Drain current limitation (OCP)
- Standby power < 30 mW at 230 VAC
- Jittered switching frequency (60 kHz ± 4 kHz) for low EMI
- Embedded error amplifier for non-isolated SMPS
- On-board soft-start
- Safe auto-restart after a fault condition
- Hysteretic thermal shutdown

Applications

- SMPS for energy metering
- Auxiliary power supplies for 3-phase input industrial systems
- LED driver

SMPS topologies

Isolated flyback (secondary-side and primary-side regulation), non-isolated flyback, buck, buck-boost.

Description

The device is an offline converter with a 1050 V avalanche rugged power section, a PWM controller, user defined overcurrent limit, protection against feedback network disconnection, hysteretic thermal protection, soft start-up and safe auto-restart after any fault condition.

Advance frequency jittering reduces EMI filter cost. Burst mode operation and the device‘s very low consumption both help to meet the standard set by energy saving regulations.

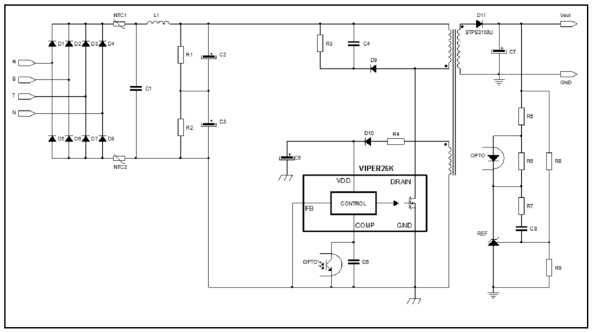

This is preliminary information on a new product in development or undergoing evaluation.
Details are subject to change without notice.
www.st.com

1 Pin description

Figure 1. Connection diagram

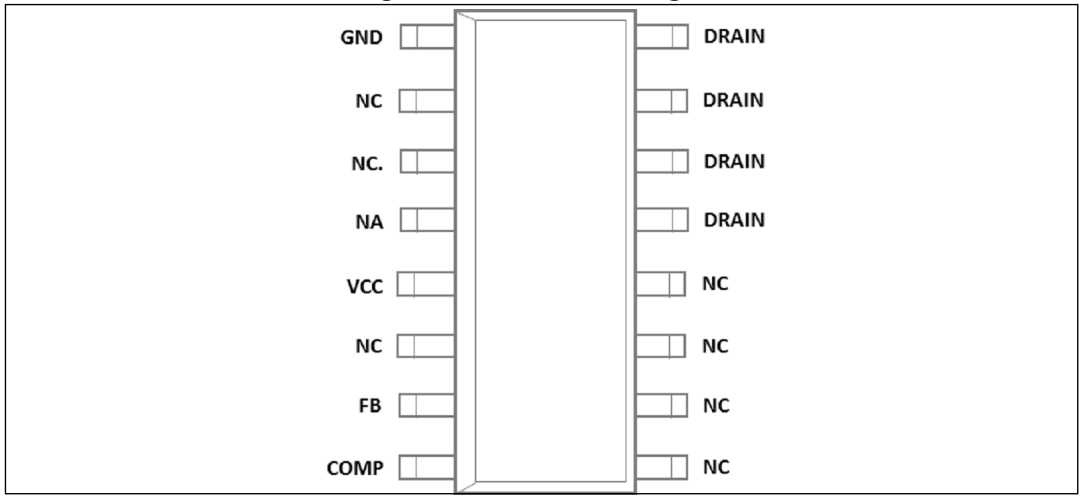

Note: A PCB copper area has to be provided under DRAIN pins to heat dissipation.

Table 1. Pin description

SO16N	Name	Function
1	GND	**Ground**. Connected to the source of the internal power MOSFET and controller ground reference.
2, 3	N.C.	**Not internally connected**. It is highly recommended to connect it to GND (pin 1) or leave floating.
4	N.A.	**Not available for user**. This pin is mechanically connected to the controller die pad of the frame. In order to improve the noise immunity, it is highly recommended to connect it to GND (pin 1).
5	VCC	**Supply voltage of the control section**. This pin provides the charging current of the external capacitor.
6	N.C.	**Not available for user**. It is highly recommended to connect it to GND (pin 1).
7	FB	**Inverting input of the internal trans-conductance error amplifier**. Connecting the converter output to this pin through a single resistor results in an output voltage equal to the error amplifier reference voltage. An external resistors divider is required for higher output voltages.
8	COMP	**Output of the internal trans conductance error amplifier**. The compensation network has to be placed between this pin and GND to achieve stability and good dynamic performance of the voltage control loop. The pin is used also to directly control the PWM with an optocoupler. The linear voltage range extends from V_{COMPL} to V_{COMPH}.
9 - 12	N.C.	**Not internally connected**. It can be connected to GND or left floating.
13 - 16	DRAIN	**High voltage drain pin**. The built-in high voltage switched start-up bias current is drawn from this pin too. Pins connected to the metal frame to facilitate heat dissipation.

2 Electrical characteristics

Table 2. Electrical and thermal characteristics

Symbol	Parameter	Value
$V_{(BR)DSS}$	Breakdown voltage	1050 V
$R_{DS(on)}$	Drain-source ON state resistance (max.@25C)	8.5 Ω
V_{START}	Drain-source start voltage	60 V (max.)
V_{DD}	Operating voltage range	[11.5 - 23.5] V
V_{REF_FB}	E/A input voltage	3.3 V (typ.)
I_{DLIM}	Drain current limitation	500mA (VIPer265K) 700mA (VIPer267K)
F_{OSC}	Switching frequency	60 KHz (typ.)
T_{SD}	Thermal shutdown temperature	160 °C (typ.)
R_{thJA}	Thermal resistance junction ambient(1) (Dissipated power = 1 W)	80 °C/W

1. When mounted on a standard single side FR4 board with 100 mm2 (0.155 sq in) of Cu (35 m thick).

Figure 2. Typical isolated flyback configuration with secondary regulation

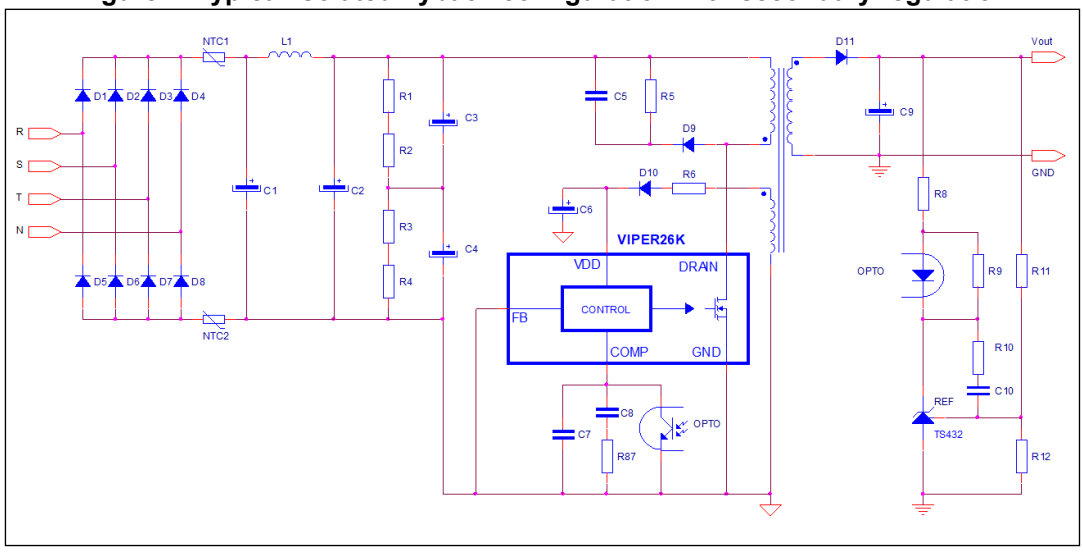

Figure 3. Typical isolated flyback configuration with primary regulation

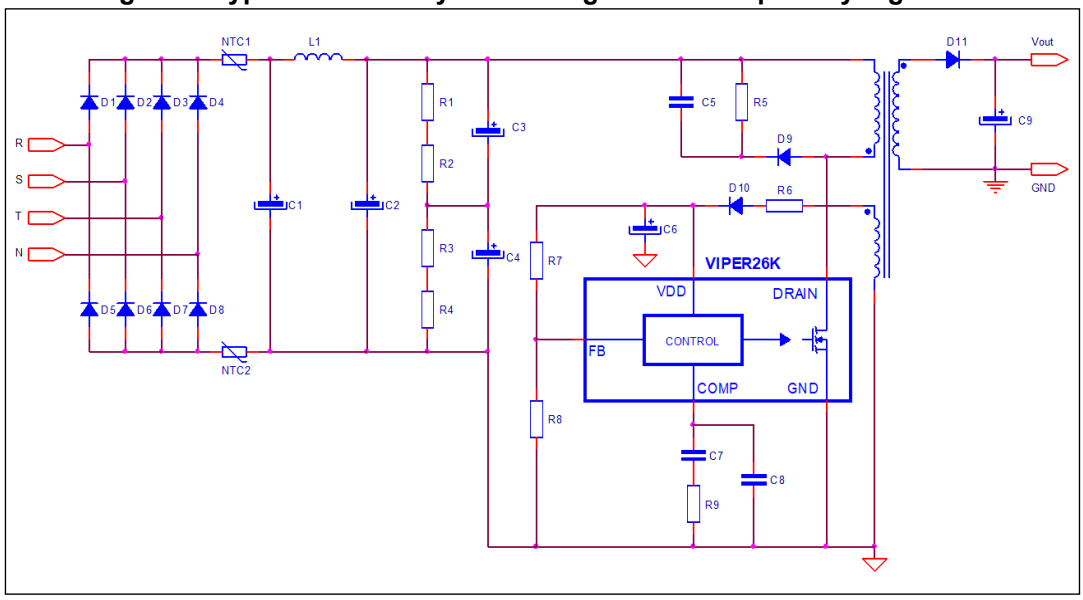

Figure 4. Typical non-isolated flyback configuration

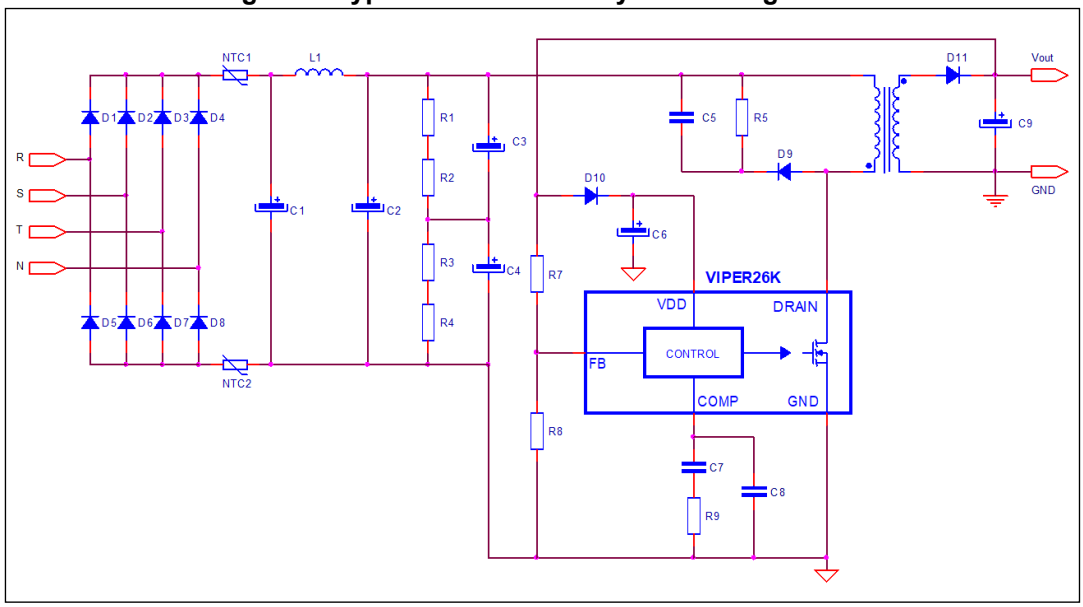

3 Ordering information

Table 3. Order codes

Order Code	I_{DLIM}	Package	Packaging
VIPER265KDTR	500 mA	SO16N	Tape & Reel
VIPER267KDTR	700 mA		

4 Revision history

Table 4. Document revision history

Date	Revision	Changes
08-Jan-2019	1	Initial release

IMPORTANT NOTICE – PLEASE READ CAREFULLY

STMicroelectronics NV and its subsidiaries (“ST”) reserve the right to make changes, corrections, enhancements, modifications, and improvements to ST products and/or to this document at any time without notice. Purchasers should obtain the latest relevant information on ST products before placing orders. ST products are sold pursuant to ST’s terms and conditions of sale in place at the time of order acknowledgement.

Purchasers are solely responsible for the choice, selection, and use of ST products and ST assumes no liability for application assistance or the design of Purchasers’ products.

No license, express or implied, to any intellectual property right is granted by ST herein.

Resale of ST products with provisions different from the information set forth herein shall void any warranty granted by ST for such product.

ST and the ST logo are trademarks of ST. All other product or service names are the property of their respective owners.

Information in this document supersedes and replaces information previously supplied in any prior versions of this document.

© 2019 STMicroelectronics – All rights reserved