V•I Chip™ BCM™ Bus Converter

- Efficiency: up to 96%
- Input: 48 V
- Power Density: >1000 W/in^3
- Current sharing: 5%
- Isolation: 2,250 Vdc
- Footprint: 0.56 in^2 / 1.08 in^2

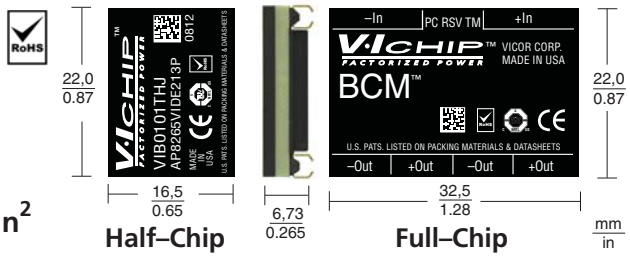

Product Description

The Bus Converter family consists of 14 models that provide an isolated intermediate bus voltage to power non-isolated POL converters. The 48 V BCMs operate from a narrow-input-range DC source and depending on the model selected, deliver a single output with ratings of 1.5 Vdc to 48 Vdc at up to 300 W. The 48 Vdc BCM family offers superior performance, the highest efficiency and power density in the smallest package available.

Model Number	Input Voltage (V)	Output Voltage (V)	Output Power (W)	Output Current (A)	Temp. Grade	Package
B048F015T14	38 – 55	1.19 – 1.71	135	90	T	Full
B048F030T21	38 – 55	2.38 – 3.43	210	70	T	Full
B048F040T20	38 – 55	3.17 – 4.58	200	50	T	Full
B048F060T24	38 – 55	4.75 – 6.87	240	40	T	Full
B048F080T24	38 – 55	6.33 – 9.16	240	30	T	Full
B048F096T24	38 – 55	7.60 – 11.0	240	25	T	Full
B048F120T30	38 – 55	9.50 – 13.8	300	25	T	Full
B048F160T24	38 – 55	12.7 – 18.3	240	15	T	Full
B048F240T30	38 – 53	19.0 – 26.5	300	12	T	Full
B048F320T30	38 – 55	25.3 – 36.7	300	9	T	Full
B048F480T30	38 – 55	38.0 – 55.0	300	6	T	Full
VIB0101THJ	38 – 55	9.5 – 13.75	120	11.3	T	Half

Part Numbering

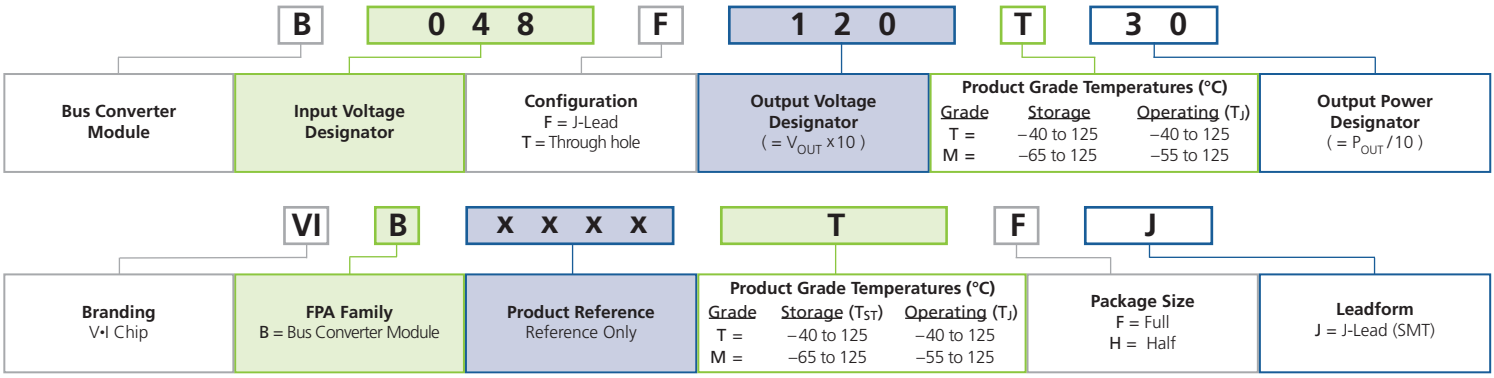

Typical Application

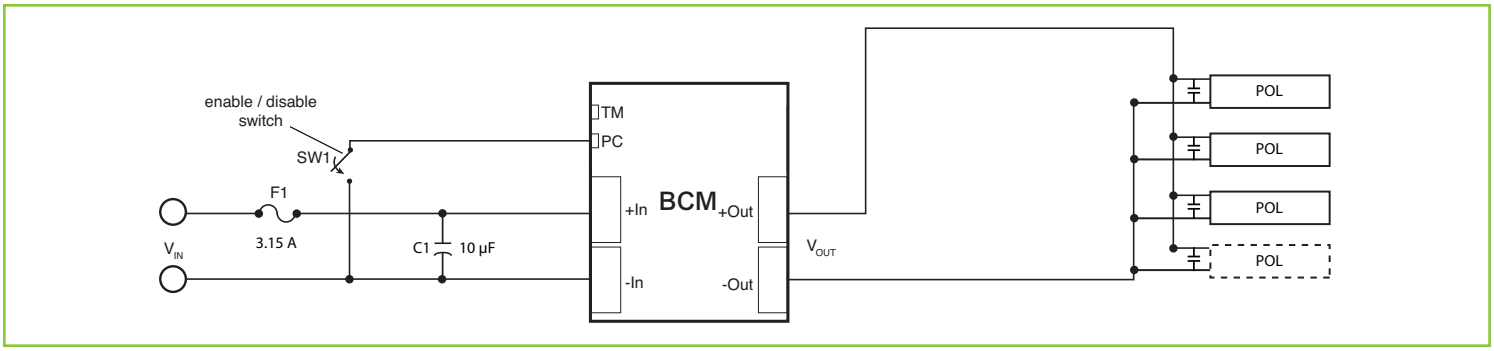

General Specifications

Parameter	Value Full	Value Half	Units	Notes
ISOLATION				
Voltage	2,250		V	Min.
Capacitance	3,000	1750	pF	
Resistance	10		MΩ	Min.
AGENCY APPROVALS / STANDARDS	cTÜVus			UL/CSA 60950, EN60950
	CE Mark			Low Voltage Directive
	RoHS			
THERMAL				
Operating Junction Temperature	-40 to 125		°C	T-Grade
	-55 to 125		°C	M-Grade
Storage Temperature	-40 to 125		°C	T-Grade
	-65 to 125		°C	M-Grade

BCM Mechanical Outline Drawing Full Chip

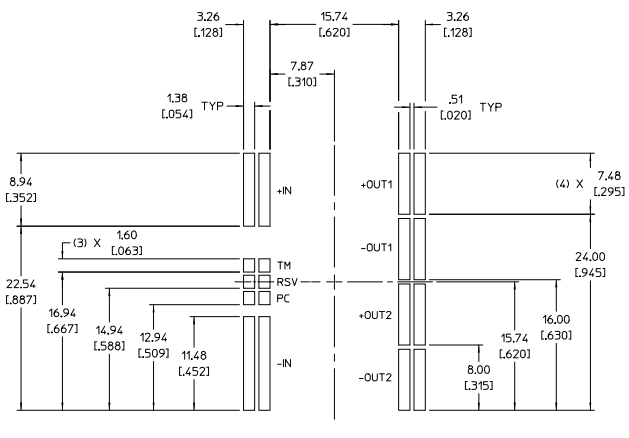

BOTTOM VIEW

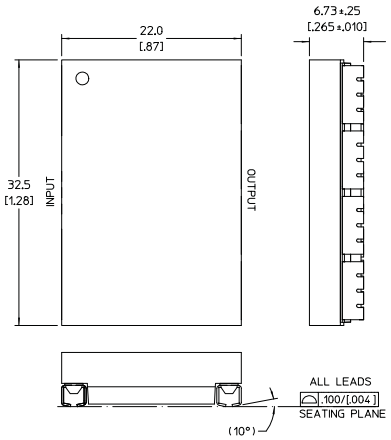

TOP VIEW (COMPONENT SIDE)

NOTES:
1. DIMENSIONS ARE mm / inch.
2. UNLESS OTHERWISE SPECIFIED, TOLERANCES ARE: .X / [.XX] = +/-0.25 / [.01]; .XX / [.XXX] = +/-0.13 / [.005]
3. PRODUCT MARKING ON TOP SURFACE

DXF and PDF files are available on vicorpower.com

BCM Mechanical Outline Drawing Half Chip

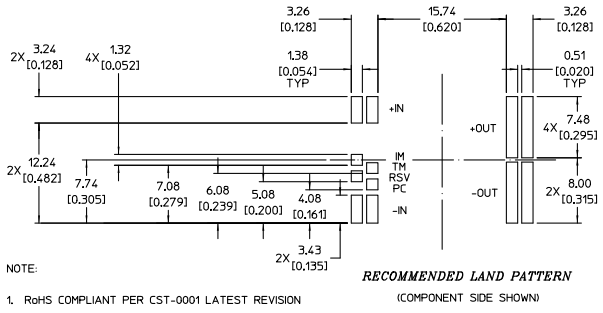

BOTTOM VIEW

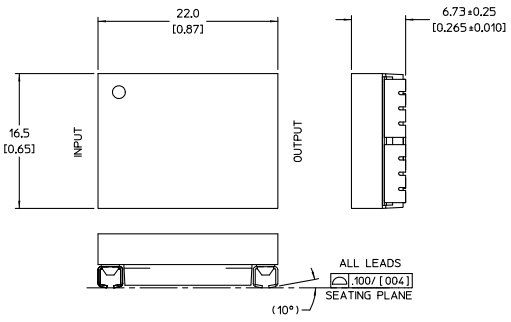

TOP VIEW (COMPONENT SIDE)

The products described on this document are protected by the following U.S. Patents Numbers: 5,945,130; 6,403,009; 6,710,257; 6,911,848; 6,930,893; 6,934,166; 6,940,013; 6,969,909; 7,038,917; 7,166,898; 7,187,263; 7,361,844; D496,906; D505,114; D506,438; D509,472 and for use under 6,975,098 and 6,984,965