VI-HAM

Harmonic Attenuator Modules

Features

- Unity Power Factor
- Safety Agency Approvals: UL, CSA, TÜV, BABT
- Meets IEC 6100-3-2 for Line Current Harmonic Content
- Reduces Peak and RMS Line Currents
- Universal Input: 85-264Vac: 50/60 Hz
- Up to 600W of Power
- Power Density Up to100W/in^3
- Adaptive Output Voltage Control
- Short-Circuit Protection
- Input Surge Current Limiting
- Converter Enable
- Power OK Output
- Size: 4.6" x 2.4" x 0.5" (116,8mm x 61,0mm x 12,7mm)
- Efficiency: 90-94% Typical
- CE Marked

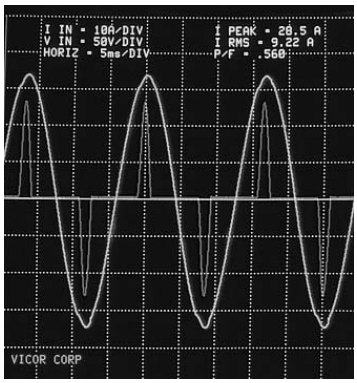

Figure 1a.

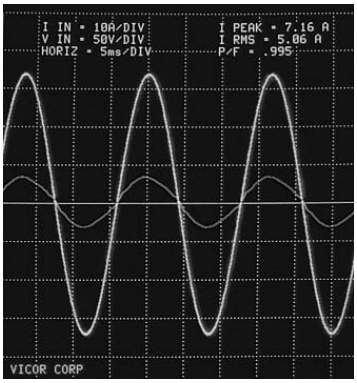

Figure 1b.

Above: Oscilloscope photos showing input voltage and current without power factor correction (A) and with power factor correction as provided by the VI-HAM (B).

Unity Power Factor

Conventional capacitive-input front ends draw energy from the AC line in short bursts of current at the peaks of the line voltage waveform. These current bursts are characterized by high peak currents and high harmonic content. The effect of the distorted line current can be appreciated by measuring the rms line current drawn by a conventional front end: the product of the measured rms current and the rms line voltage — the "apparent power" being delivered by the line — will be significantly greater (typically 1.6X) than the DC power delivered by the front end. The "extra" rms current at the input is circulating harmonic currents which deliver no power to the load but which flow in the delivery system and contribute to losses. Only the fundamental component of the line current contributes to "real" power flow. Power factor — the ratio of "real" to "apparent" power — is a measure of the effectiveness with which an AC load can extract usable power from an AC source.

The VI-HAM *(see Fig. 2)* consists of a full-wave rectifier, a proprietary high-frequency zero-current switching (ZCS) boost regulator (patents applied for), active inrush, short-circuit protection, control and housekeeping circuitry. The incoming AC line is rectified and fed to the ZCS boost converter. The control circuitry varies the operating frequency of the ZCS boost converter so as to simultaneously maintain the output voltage of the VI-HAM at a DC voltage value above the peak of the incoming line, while forcing the input current to the ZCS converter to follow the waveshape of the rectified line. By this means, the AC input current follows the AC voltage waveform and a power factor better than 0.99 is achieved. Operating efficiency of the ZCS boost converter is optimized at any incoming line voltage by a patented adaptive output voltage control scheme.

The VI-HAM also includes active circuitry which controls inrush currents when power is applied and active short circuit protection circuitry — features not normally found in conventional power factor correctors.

Housekeeping circuitry provides two signals of use to the system designer *(see Fig. 2)*: Module Enable and Power OK. Referencing the timing diagram *(see Fig. 3)*, the Module Enable signal, which is connected to the Gate In inputs of the Vicor DC-DC converters powered by the VI-HAM, will come high and enable the DC-DC converters when the VI-HAM output voltage exceeds 240Vdc. The DC-DC converter voltage outputs will be up approximately 10 ms after Module Enable goes high. Typically, 20 ms after Module Enable goes high the VI-HAM Power OK signal, which can be used by the system designer to enable circuitry powered by the DC-DC converter modules, goes low. On loss of power or brownout, the Power OK signal will go high when the VI-HAM DC output voltage drops below 230V, signaling an impending loss of input power to the converter modules. When the DC output dips below 195V, the Module Enable signal will toggle low, disabling the converter modules and unloading the VI-HAM. The VI-HAM will provide at least 16 ms of ride-through or holdup time, and at least 5 ms of AC fail warning time with a 1000 µF output capacitor.

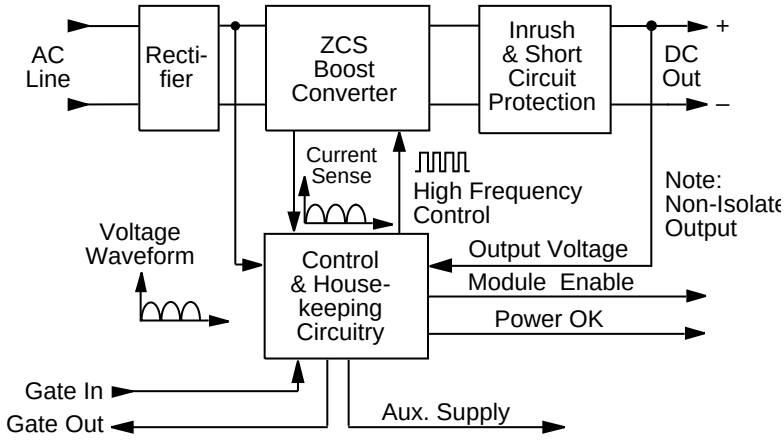

NOTE: No input to output isolation.

Figure 2 • VI-HAM Block Diagram

Set your site on VICOR at www.vicorpower.com

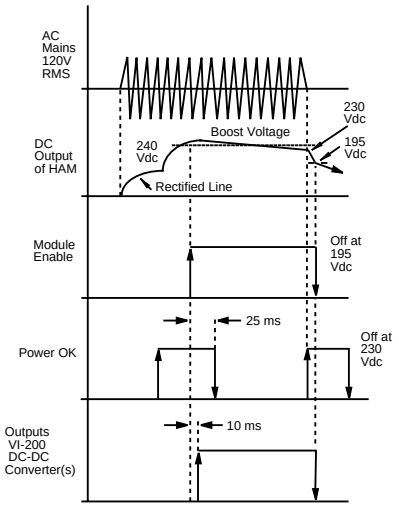

Figure 3 • Functional Timing Diagram

Active power factor correctors incorporate a boost regulator which must operate over a range of incoming AC line voltages. Conventionally, the output voltage of the boost regulator is set to a value greater than the maximum anticipated peak value of the incoming AC line.

Vicor varies the output voltage of the VI-HAM as a function of incoming AC line voltage *(see Fig. 4, patent applied for)*. On a nominal 120Vac line the output voltage of the VI-HAM is 260Vdc — well within the input operating voltage range of standard Vicor converters. As input line increases, so does the VI-HAM output voltage; at 220Vac the delivered voltage will be about 350V. For any given input line voltage, the VI-HAM maintains enough headroom between the output voltage and peak input voltage to ensure high quality active power factor correction without unnecessarily sacrificing operating efficiency.

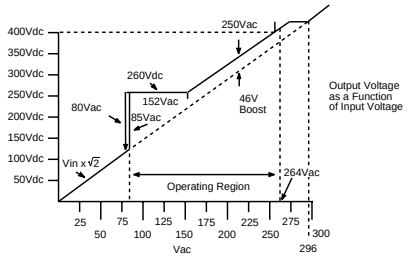

Figure 4 • Input Voltage vs. Output Voltage

VI-HAM Protection Features

Overtemperature Shutdown
The VI-HAM incorporates overtemperature shut-down, and is designed to shut down when the temperature of the baseplate exceeds 90–100°C. It is not safe to run the VI-HAM for extended periods above its maximum operating temperature of 85°C.

Short Circuit Protection
The VI-HAM contains a short circuit shutdown function. Operation of this function does not clear the input fuse and the output will resume normal operation after removal of the short. A small period of time may be required to allow for cooling of an internal PTC. Overcurrent protection is provided by the Vicor DC-DC converters.

Output Overvoltage Protection
The VI-HAM contains output overvoltage protection. In the event the output voltage exceeds approximately 420Vdc, the boost will decrease to maintain 420Vdc on the output. When the peak of the AC line exceeds 420V (approximately 293Vac) the boost will have been reduced to zero. Beyond this the protection circuit will be enabled and the output voltage will decrease.

Pin Function Description

• L1 and L2/N (VI-HAM):
These pins are to be connected to the AC mains output of a suitable EMI/RFI filter (Vicor P/N 07818 or equivalent). Do not connect an X capacitor across these pins as power factor correction will be slightly degraded.

• +IN, –IN (VI-HAMD, VI-BAMD):
These pins are connected to the output of the external bridge rectifier.

• Gate Input (VI-HAM):
This pin disables the boost converter only. Rectified line current may still be present on the output. *This pin does not provide the same function as the gate input pin of VI-200/VI-J00 modules.* The user should not make any connection to this pin.

• Gate Input (VI-HAMD):
This pin serves as a rectified AC following pin for power factor correction synchronization to line. This connection must be made through the synchronization diodes between the line filter and bridge rectifier *(see Fig. 10)*.

• Gate Input (VI-BAMD):
The Gate Input pin is an interface pin to the Gate Out pin of a VI-HAM, VI-HAMD or VI-BAMD depending on configuration. The user should not make any other connection to this pin.

• Gate Output:
The Gate Output pin is an interface pin to BAMDs; the user should not make any other connection to this pin.

• +Output and -Output and Holdup Capacitor:
These outputs should be connected to the respective inputs of Vicor DC-DC converters. In addition, an external holdup capacitor of 1000 µF with a minimum voltage rating of 450Vdc, is required across the output for 16 ms ride through time at 600W (500 µF for 300W, etc). Do not exceed 3000 µF of total output capacitance. Lower values of capacitance may be used for reduced holdup requirements, but not less than 330 µF. Lower capacitance values may degrade power factor specifications.

• Auxiliary Supply (A/S):
The VI-HAM and VI-BAMD contain an internal low voltage output (A/S) that may be used to power primary side logic. This output is 19-23Vdc, referenced to -OUT, at 3 mA max. Do not overload or short this output as the VI-HAM will fail. A typical use for A/S is to power an optical coupler that isolates the Power OK signal.

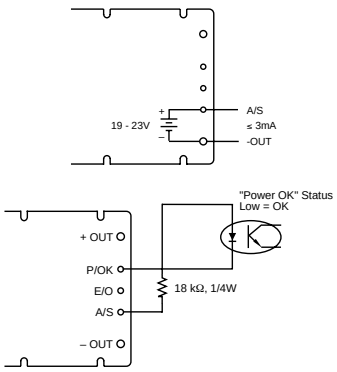

Figure 5 • Auxiliary Supply (A/S)

• Power OK (P/OK)
P/OK is a monitor signal that indicates the status of the AC mains and the DC output voltage of the VI-HAM. P/OK, during normal operation, is an active low (see *Fig. 6*). In the event AC mains or DC output fails, this pin goes to an open circuit state. P/OK is asserted when the output bus voltage is within normal operating range and 20-25 ms after DC-DC converters are enabled by the Module Enable output of the VI-HAM. This provides sufficient time for the converters to turn on and their outputs to stabilize prior to P/OK being asserted. When the AC mains is removed and the output of the VI-HAM drops below 230V, P/OK goes to an open circuit state. When the output voltage drops below 195V the converters are disabled via Module Enable. P/OK will provide power fail warning at least 1 ms prior to converter shutdown.

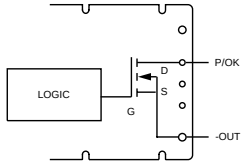

Figure 6 • Power OK (P/OK)

• Module Enable (E/O)
The Module Enable output is used to disable the DC-DC converters until there is sufficient energy in the holdup capacitor (240V) to support normal operation, while limiting inrush current. Module Enable must be connected to the Gate Input of all driver DC-DC converters. It is not necessary to connect this pin to boosters as they are controlled by their respective driver. If the AC mains fail, Module Enable goes low when the DC output of the VI-HAM drops below 195V. Failure to connect Module Enable may result in the output of the VI-HAM latching low during turn-on.

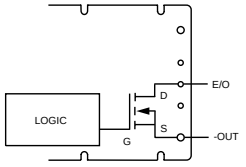

Figure 7 • Enable/Output (E/O)

Set your site on VICOR at www.vicorpower.com

VI-HAM Protection Features (continued)

Inrush Current Limit
The VI-HAM contains inrush current protection in the form of a PTC and a shunt device. The same PTC is used for overcurrent protection on the output.

Input Transient Overvoltage Surge Protection
This function is included in all VI-HAM compatible filters. If any other filter is used this function must be provided externally, typically by a transient suppressor.

• Safety Note •

All VI-HAM configurations must be preceded by an appropriately rated fast-blow 3AG fuse ahead of the line filter. This fuse would be a 10A for a single VI-HAM connected to line. For fusing information on other VI-HAM configurations, please contact Vicor's Application Engineering Department.

Compatible Modules

Over the full range of input voltages (85 to 264 Vac), the output varies from 260 to 415Vdc. Therefore the modules used with the VI-HAM are from the VI-260 and VI-J60 families.

When ordering add the prefix VI- to the part number below; i.e., VI-260-CU.

VI-200 Family

5V	12V	15V	24V	48V	Output
260-CU	261-CU	262-CU	263-CU	264-CU	200W
260-CV	261-CV	262-CV	263-CV	264-CV	150W
260-CW	261-CW	262-CW	263-CW	264-CW	100W
260-CX	261-CX	262-CX	263-CX	264-CX	75W
260-CY	261-CY	262-CY	263-CY	264-CY	50W

Framed area available as boosters.
*Change VI-**2**XX-XX to VI-**B**XX-XX.*

VI-J00 Family

5V	12V	15V	24V	48V	Output
J60-CW	J61-CW	J62-CW	J63-CW	J64-CW	100W
J60-CX	J61-CX	J62-CX	J63-CX	J64-CX	75W
J60-CY	J61-CY	J62-CY	J63-CY	J64-CY	50W
J60-CZ	J61-CZ	J62-CZ	J63-CZ	J64-CZ	25W

Prod. Grade	Baseplate Temp.	Storage Temp.	Model
E	-10°C to +85°C	-20°C to +100°C	VI-HAM-EM
C	-25°C to +85°C	-40°C to +100°C	VI-HAM-CM
I	-40°C to +85°C	-55°C to +100°C	VI-HAM-IM
M	-55°C to +85°C	-65°C to +100°C	VI-HAM-MM

Filter Requirements for the VI-HAM

The VI-HAM requires an external filter to meet international standards for conducted EMI/RFI emissions. P/N 07818 (for use up to 600W) incorporates transient protection for compliance with IEC 61000-4-5 Level 3 and meets conducted emissions standards EN55022 and FCC Part 15 Level A (minimum loading of 150W required).

VI-HAM Configurations

VI-HAM-CM Driver HAM: Fully configured power factor correcting front end.

VI-HAMD-CM Driver HAM: No internal bridge rectifier or synchronization diodes.

VI-BAMD-CM Booster HAM: Companion module to VI-HAMD-CM used for additional output power. No internal bridge rectifier.

Use the VI-HAM-CM for applications requiring up to 600W from the front end. For applications in excess of 600W, it is not possible to simply parallel two driver VI-HAMs due to conflicting control loops. Gate Out to Gate In connections on respective driver/boosters are used to ensure that the power train of the VI-HAMs current-share. However, this does not ensure that the diodes in the lower half of the bridge rectifier will current-share. A solution for this situation is illustrated (*see Fig. 8).*

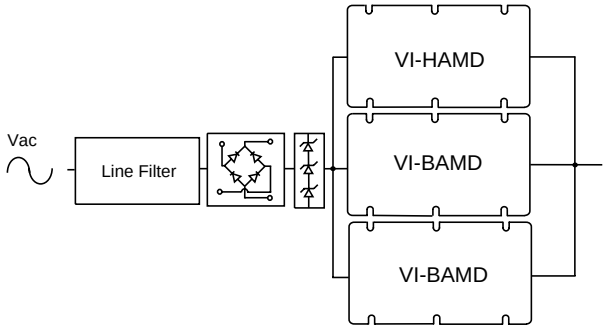

Figure 8 • VI-HAMD with Booster HAMs (BAMDs) — No Internal Bridge Rectifier

A solution to bridge rectifier current sharing issues is to remove the bridge rectifier from each VI-HAM and use one diode bridge sized to handle the entire load. Approximately 25% of the heat is removed from the VI-HAM in this approach; use a VI-HAMD-CM with one or more VI-BAMD-CMs. Note: Synchronization diodes are required when using this approach *(see Fig. 10)*.

Set your site on VICOR at www.vicorpower.com

Specifications

VI-HAM and VI-HAMD With External Bridge and Synchronization Diodes, 1000 µF Output Capacitor and Vicor Line Filter P/N 07818.
VI-BAMD When Operated with VI-HAM and VI-HAMD, Respectively.
(Unless otherwise indicated, specifications apply over operating input voltage and temperature range)

Parameter	VI-HAM	VI-HAMD	VI-BAMD	Remarks
Line Input 47–63 Hz	85V to 264V (Volts AC)	85V to 264V (Rectified AC)	85V to 264V (Rectified AC)	Unit will operate from 400 Hz, but may not meet PF or THD specs
Output Power	Up to 600W	Up to 600W	Up to 600W	Derate from 110Vac to 85 Vac @ 8W/Volt
Efficiency	90–91%	90-91% (With ext. rectifier loss)	90–91% (With ext. rectifier loss)	120Vac, full load
Efficiency	93–94%	93-94% (With ext. rectifier loss)	93–94% (With ext. rectifier loss)	240Vac, full load
Power Factor	0.99	0.99	0.99	120/240Vac, 50-100% of full load
Total Har. Distortion (line current)*	<7.5%	<7.5%	<7.5%	Sinusoidal, 120Vac, full load
Total Har. Distortion (line current)*	<8.5%	<8.5%	<8.5%	Sinusoidal, 240Vac, full load
Output Ripple	7V p-p	7V p-p	7V p-p	120Vac, full load
Output Ripple	5V p-p	5V p-p	5V p-p	240Vac, full load
Inrush Current	<13A peak	<13A peak	<13A peak	120Vac, full load
Inrush Current	<20A peak	<20A peak	<20A peak	240Vac, full load
Output Capacitance	500-3000 µF	500-3000 µF	500-3000 µF	External to HAM (for 600W load) (1000 µF Nom.)
Ride Through/Holdup Time	16 ms	16 ms	16 ms	600W output with a 1000 µF hold-up capacitor (300W = 500 µF, etc.)
Transient Surge Withstand, Normal Mode	Included in the external filter	Included in the external filter	Included in the external filter	
Isolation Voltage				
Input to Output	None	None	None	Isolation provided by DC-DC converters
Input to Baseplate	1,500 VRMS	1,500 VRMS	1,500 VRMS	
Output to Baseplate	1,500 VRMS	1,500 VRMS	1,500 VRMS	
Auxiliary Output	19-23Vdc @ ≤3 mA	19-23Vdc @ ≤3 mA	19-23Vdc @ ≤10 mA	Note: Not short circuit protected
Thermal Shutdown	90°C-100°C baseplate	90°C-100°C baseplate	N/A	
Baseplate Temperature	-10°C to +85°C (E-Grade)	-25°C to +85°C (C-Grade)	-40°C to +85°C (I-Grade)	-55°C to +85°C (M-Grade)
Storage Temperature	-40°C to +100°C (C-Grade)	-55°C to +100°C (I-Grade)	-65°C to +100°C (M-Grade)	
Short Circuit Protection	Yes	Yes	Yes	
MTBF (GB, 25°C)	>420,000 hours	>424,000 hours	>818,000 hours	
Size	4.6" x 2.4" x 0.5" (116,8 x 61,0 x 12,7)	4.6" x 2.4" x 0.5" (116,8 x 61,0 x 12,7)	4.6" x 2.4" x 0.5" (116,8 x 61,0 x 12,7)	
Weight	6 Ounces (170 Grams)	6 Ounces (170 Grams)	6 Ounces (170 Grams)	

* $I_{THD} = HAM_{THD} - V_{THD}$
Line current total harmonic distortion = input voltage distortion plus 8.5% max.

Application of the VI-HAM

The VI-HAM must be used in conjunction with a suitable line filter, such as Vicor's P/N 07818**, output holdup capacitor and Vicor DC-DC converters (see *Fig. 9*). Connect single phase AC mains to the input of the line filter via a standard 10A AC fuse. Connect the output of the filter to L1 and L2/N of the VI-HAM. Do not put an X capacitor across the input of the VI-HAM or use a line filter with an X capacitor on its output as power factor correction may be impacted. Connect the +Output of the VI-HAM to the +Input of the converters via a 3A PC Tron DC fuse. Connect the -Output of the VI-HAM to the -Input of the converters. Connect a 1000 µF electrolytic capacitor rated at a minimum of 450Vdc across the + and -Output of the VI-HAM (or 500 µF for 300W, etc). This capacitor must be in close proximity to the VI-HAM. Connect the Enable Output of the VI-HAM to the Gate Input of each driver converter to disable the converters until the output of the VI-HAM is within normal operating range. Please refer to Vicor's Applications Manual for information on the proper connection of the DC-DC converters. The aforementioned connections are the minimum required. In addition, there are other features available.

• The Auxiliary Supply output is approximately 21V at 3 mA max. This output is usually used in conjunction with the Power OK signal. Power OK provides an indication of the status of the DC output and the AC mains.

• The Enable Output of the VI-HAM must be connected to the Gate Input of all driver modules. The VI-HAM will then disable the module output until the input exceeds 85Vac and the output has been boosted to 260Vdc. If an external load is connected directly to the output of the VI-HAM, do not apply the load until the output of the VI-HAM is in boost mode.

• Although the efficiency of the VI-HAM is quite high, it still dissipates significantly more power than a VI-200 DC-DC converter. Care should be taken to cool it. Thermal compound should be used between the heatsink and baseplate of the VI-HAM, VI-HAMD and VI-BAMD.

• When making any connections to the VI-HAM for measurement purposes, remember that it is not isolated from the line — either input or output. A line isolation transformer must be used when making scope measurements.

• The input voltage range of the VI-HAM is 85 to 264Vac; however it may not start boosting until the AC mains has exceeded 87Vac. Once the VI-HAM has started, it will operate down to 85Vac. The VI-HAM contains 2.5 to 6V of input hysteresis, therefore if the AC line impedance is high, i.e., when using a variable autotransformer, the VI-HAM may start, but the AC line may then fall enough to drop below undervoltage lockout. When this happens the AC line will go up, the VI-HAM starts and the cycle repeats. Therefore avoid soft AC lines at or near low line.

**Contact the Vicor technical support center for filter substitutes

Set your site on VICOR at www.vicorpower.com

Connection Diagram, VI-HAM/DC-DC Converters

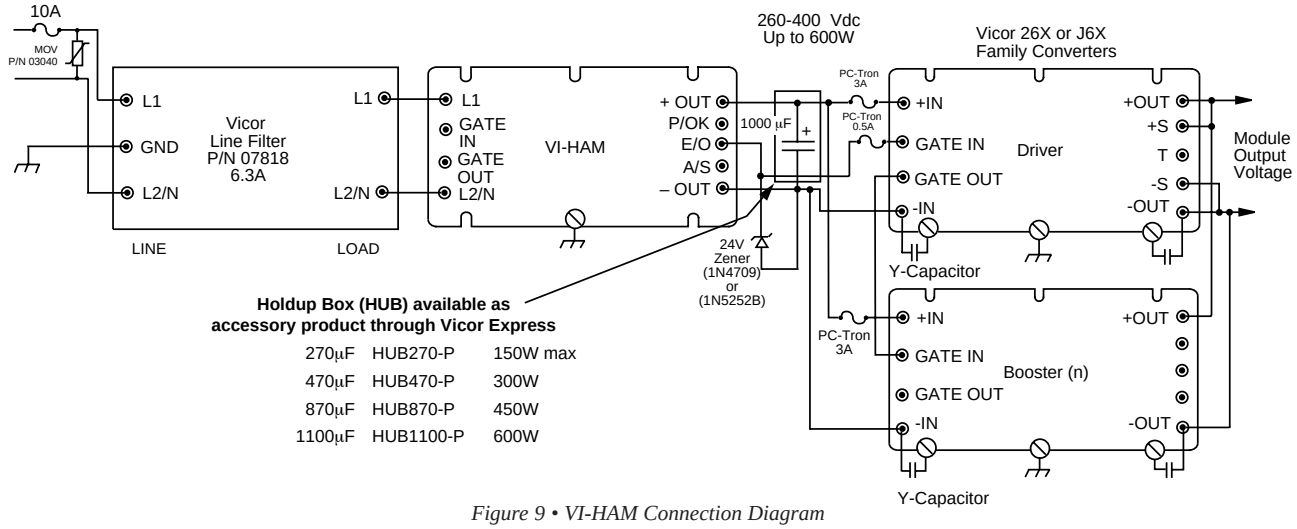

Figure 9 • VI-HAM Connection Diagram

Connection Diagram, VI-HAMD/VI-BAMD

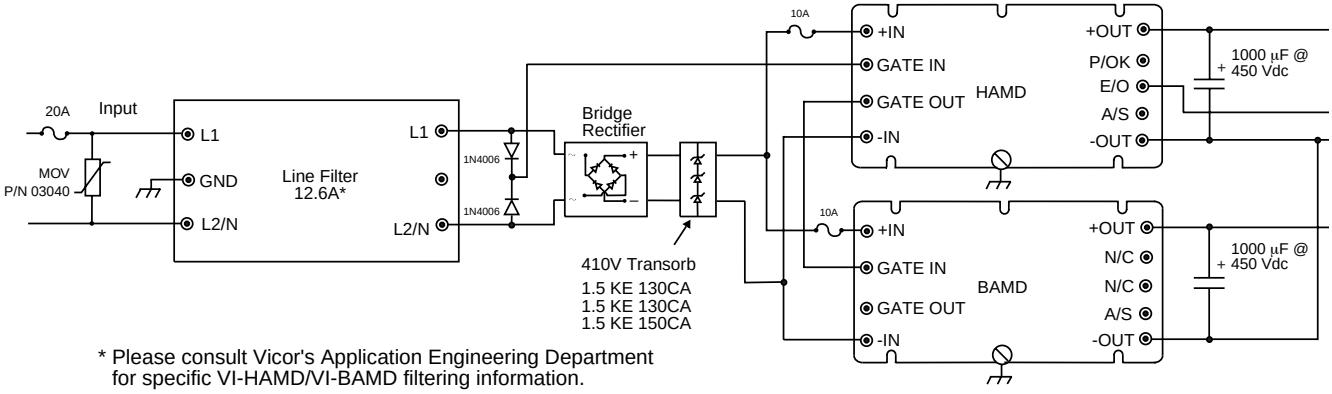

Figure 10 • VI-HAMD/BAMD Connection Diagram

VI-HAM / HAMD / BAMD Mechanical Diagram

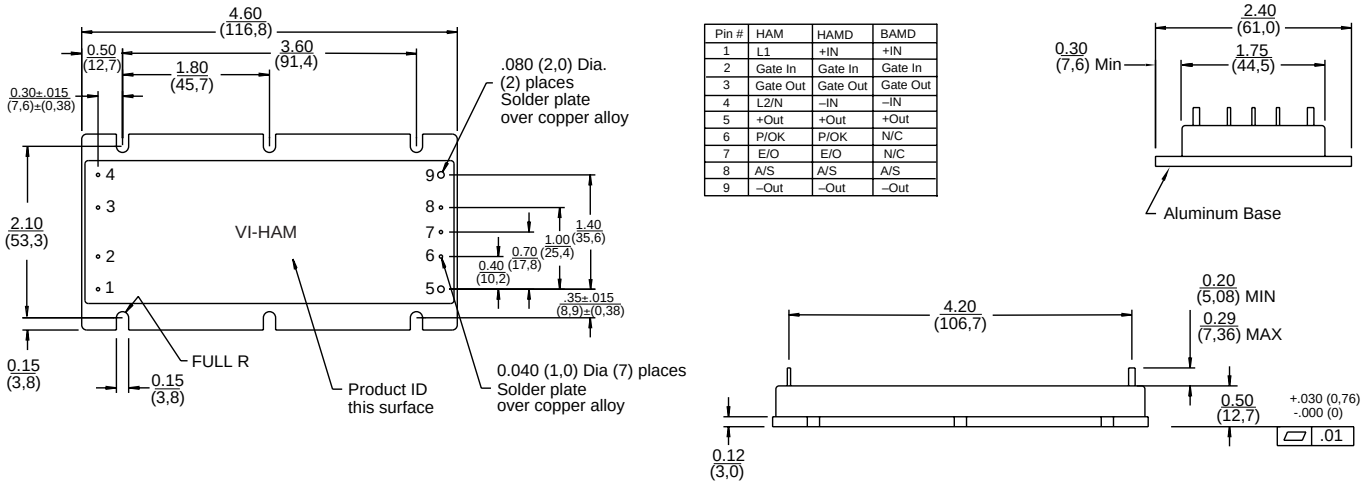

Set your site on VICOR at www.vicorpower.com

Typical HAM Filter Applications

Operating voltage = 85 to 250Vac
Operating current = 6.3A
Operating frequency = 50/60 Hz
Operating temperature = 20 to 50˚C
Diel. withstanding (line - case) = 1500Vac
Diel. withstanding (line - line) = 1500Vac
Leakage current = 1.0 ma at 220Vac, 50 Hz
Max residual voltage after 1 sec. = 34V
Agency approvals = UL, CSA, TÜV

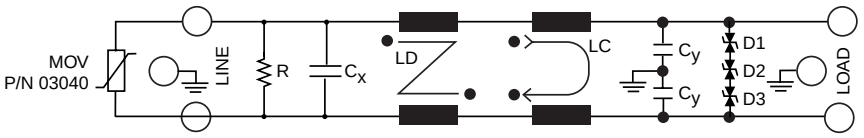

HAM Filter P/N 07818

C_X = 1.5uF(x2)SH C_y = .01uF SH LC = 6.9mH LD = .72mH
R = 235K OHM D1,2 = 1.5KE130CA D3 = 1.5KE150CA

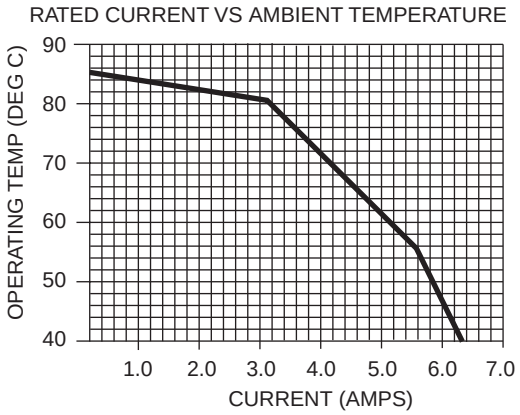

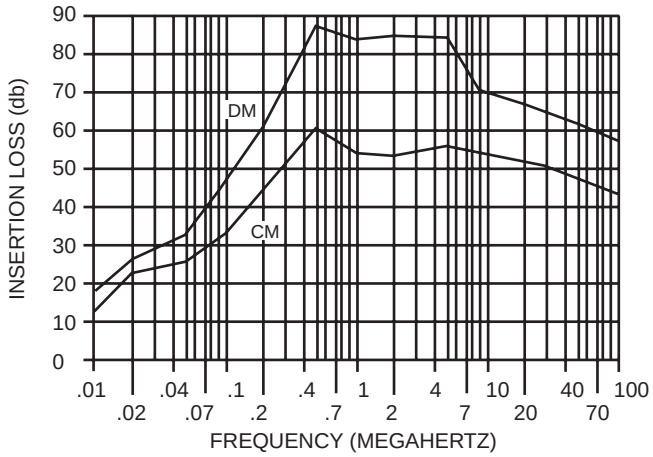

HAM Filter Mechanical Diagram

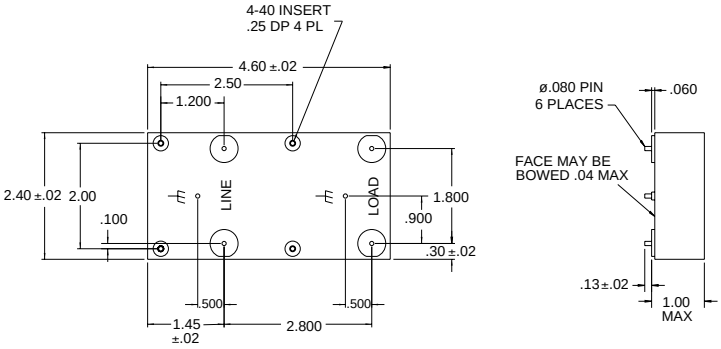

Vicor's comprehensive line of power solutions includes modular, high density DC-DC converters and accessory components, configurable power supplies, and custom power systems.

Information furnished by Vicor is believed to be accurate and reliable. However, no responsibility is assumed by Vicor for its use. No license is granted by implication or otherwise under any patent or patent rights of Vicor. Vicor components are not designed to be used in applications, such as life support systems, wherein a failure or malfunction could result in injury or death. All sales are subject to Vicor's Terms and Conditions of Sale, which are available upon request.

Specifications are subject to change without notice.