Data Sheet

VI-HAM™, VE-HAM™

High-Boost Harmonic Attenuation Module

Features

- 675 Watts output power
- Unity power factor
- 85 – 264 Vac universal input
- Meets EN61000-3-2
- Short circuit protection
- Input surge limiting
- High efficiency
- RoHS compliant
- For use with Vicor's V375, VI-26x and VI-J6x DC-DC Converters

Product Overview

The high-boost HAM (Harmonic Attenuator Module) is a universal AC input, PFC front-end module that has been optimized for use with Vicor's V375 series of DC-DC converters.

A single high-boost HAM may be used with any combination of V375 series DC-DC converters which are available in Micro, Mini and Maxi packages with up to 600 Watts of output power. Versions without internal diode bridges (HAMD and BAMD) can be operated in parallel to provide power expansion capability. The combination of the high-boost HAM with V375 DC-DC converters results in a power conversion system with twice the power density, fewer components and lower cost compared to previous HAM-based solutions.

In addition, the high-boost HAM is fully compatible with Vicor's VI-26x and VI-J6x series DC-DC converters. This gives designers the freedom to choose from the industry's broadest selection of DC-DC converters with outputs from 2 to 95 Vdc, 50 – 600 Watts. The user need only provide external hold-up capacitors, a few discrete components, and a line filter (available from Vicor).



For application information please see the Design Guide at www.vicorpower.com/mmmguide.



4.6 x 2.4 x 0.5 in
(116,8 x 61,0 x 12,7 mm)

Absolute Maximum Ratings

Parameter	Rating	Unit	Notes
L to N voltage	265	Vac	Continuous
	280	Vac	100 ms
Mounting torque	5 (0.57)	in - lbs (N-m)	# 6-32 or m3.5
Pin soldering temperature	750 (400)	°F (°C)	
Operating temperature	–55 to +85	°C	M-Grade
Storage temperature	–65 to +100	°C	M-Grade
Auxiliary output	3	mA	

Part Numbering

VI - HAM - C - L

RoHS Designator
VI = Non RoHS Compliant
VE = RoHS Compliant

Product Type
HAM = Harmonic Attenuator Module
*HAM**D** = Harmonic Attenuator Module **Driver***
*B**A**M**D** = Harmonic Attenuator Module **Booster***

(HAMD and BAMD can be used in parallel or in arrays for applications that require more power than that available from a single HAM)

Product Grade Temperatures (°C)

Grade	Operating	Storage
E =	–10 to +85	–40 to +100
C =	–25 to +85	–40 to +100
I =	–40 to +85	–55 to +100
M =	–55 to +85	–65 to +100

Output
***L** = 675 W*

Set your site on VICOR at vicorpower.com

ELECTRICAL CHARACTERISTICS

Electrical characteristics apply over the specified operating voltage range, output load and baseplate temperature, unless otherwise specified. All temperatures refer to the operating temperature of the baseplate. Specifications apply for AC mains having no more than 5% total harmonic distortion.

■ INPUT SPECIFICATIONS (HAM-xL, HAMD-xL, BAMD-xL)

Parameter	Min	Typ	Max	Unit	Notes
Operating input voltage HAM, HAMD, BAMD	85		264	Vac	Rectified AC for HAMD, BAMD
AC line frequency	47		63	Hz	Unit will operate at 400 Hz but may not meet PF or THD specs
Power factor	0.99				115 / 230 Vac, 50 – 100% load
Total harmonic distortion (line current)			7.5	%	115 Vac, sinusoidal input, full load
			8.5	%	230 Vac, sinusoidal input, full load
Inrush current			20	Amps	230 Vac, full load
			13	Amps	115 Vac, full load
CM Filter Inductance	3	6		mH	External to HAM module (see Fig. 10)
DM Filter Inductance	0.2	0.35	0.75	mH	External to HAM module (see Fig. 10)

■ OUTPUT SPECIFICATIONS

Parameter	Min	Typ	Max	Unit	Notes
Maximum output power			675	Watts	See power derating graph, Fig.3
Output voltage	278	280	282	Vdc	115 Vac In
	360	365	370	Vdc	230 Vac In (see Fig. 3)
Efficiency	90		91	%	115 Vac, sinusoidal input, full load; Includes external rectifier loss for HAMD and BAMD
	93		94	%	230 Vac, sinusoidal input, full load; Includes external rectifier loss for HAMD and BAMD
External hold up capacitance per HAM	500		3,000	µF	300 W, 500 µF minimum, external to HAM
					675 W, 1,000 µF minimum, external to HAM
Ride through / hold up time	16			ms	675 W output with 1,000 µF hold up capacitor, external to HAM
Ripple		7	10	Vp-p	115 Vac, full load, 1,000 µF hold up capacitor, external to HAM
		5	6	Vp-p	230 Vac, full load, 1,000 µF hold up capacitor, external to HAM
Short circuit shut down current			100	mA	Foldback current limiting

■ CONTROL SPECIFICATIONS

Parameter	Min	Typ	Max	Unit	Notes
Power OK threshold		270		Vdc	
Module enable/disable threshold	240	250	260	Vdc	
Auxiliary output	19		23	Vdc	≤ 3 mA
			3	mA	Do not overload or add external capacitance

■ ELECTROMAGNETIC COMPATIBILITY

Parameter	Standard	Notes
Transient / surge immunity	EN61000-4-5	1 kV L-N, 2 kV L-PE, 30205 filter and 30076 MOV
Line disturbance / immunity	EN61000-4-11	Main's interruption or brown out
Flicker / inrush	EN61000-3-3	20 A peak inrush at 230 Vac input
Harmonic current	EN61000-3-2	7.5% THD

■ SAFETY SPECIFICATIONS

Parameter	Min	Typ	Max	Unit	Notes
Isolation (in to out)		None			Isolation provided by DC-DC converters
Dielectric withstand (I/O to baseplate)	2,121			Vdc	Baseplate earthed
Capacitance		150		pF	Input to baseplate

■ AGENCY APPROVALS

Safety Standards	Markings	Notes
UL60950-1, EN60950-1, CSA 60950-1	cTÜVus, cURus	
	CE Marked	Low Voltage Directive

■ GENERAL SPECIFICATIONS

Parameter	Min	Typ	Max	Unit	Notes
Size		4.6 x 2.4 x 0.5 (116,8 x 61,0 x 12,7)		in (mm)	
Weight		6.4 (180)		oz (g)	
Pin material		Solder plate over copper alloy			
Cover material		GE ULtem 2100 black #7310 UL94-VO rated			
Thermal shut down	90		100	°C	Baseplate temperature
MTBF					
HAM	420,000			hrs	GB, 25°C
HAMD	424,000			hrs	GB, 25°C
BAMD	818,000			hrs	GB, 25°C

TECHNICAL DESCRIPTION

The HAM (Figure 1) consists of a full-wave rectifier, a high-frequency zero-current switching (ZCS) boost converter, active inrush current limiting, short-circuit protection, control and housekeeping circuitry. The incoming AC line is rectified and fed to the boost converter. The control circuitry varies the operating frequency of the boost converter to maintain the output voltage of the HAM above the peak of the incoming line, while forcing the input current to follow the waveshape and phase of the line voltage. The AC input current follows the voltage waveform and a power factor better than 0.99 is achieved. Operating efficiency of the boost converter is optimized at any incoming line voltage by an adaptive output voltage (Figure 3) control scheme.

The output voltage of the HAM is a function of incoming AC line voltage (Figure 3). On a nominal 115 Vac line, the output voltage of the HAM is 280 Vdc — well within the input operating voltage range of Vicor V375 DC-DC converters. Above 180 Vac input, the output voltage linearly increases with input voltage. At 230 Vac the delivered voltage will be approximately 365 Vdc. For any given input line voltage, the HAM maintains enough headroom between the output voltage and peak input voltage to ensure high quality active power factor correction without sacrificing operating efficiency.

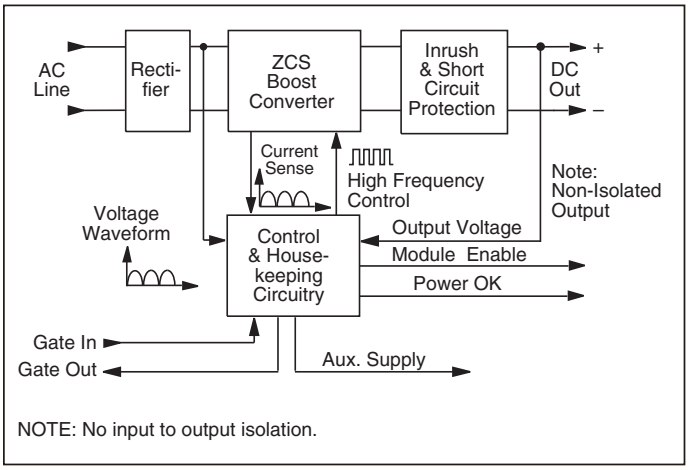

Figure 1 — *HAM block diagram*

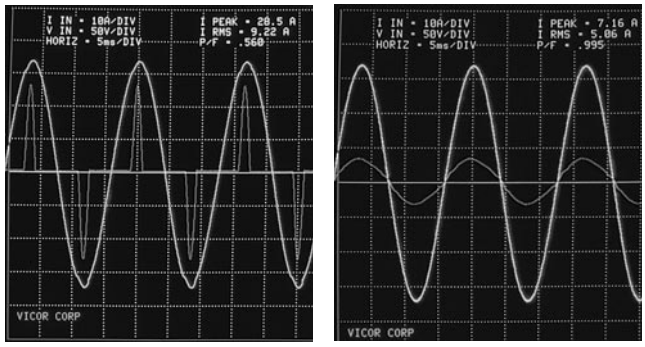

Figure 2 — *Input voltage and current wave forms, with and without power factor correction*

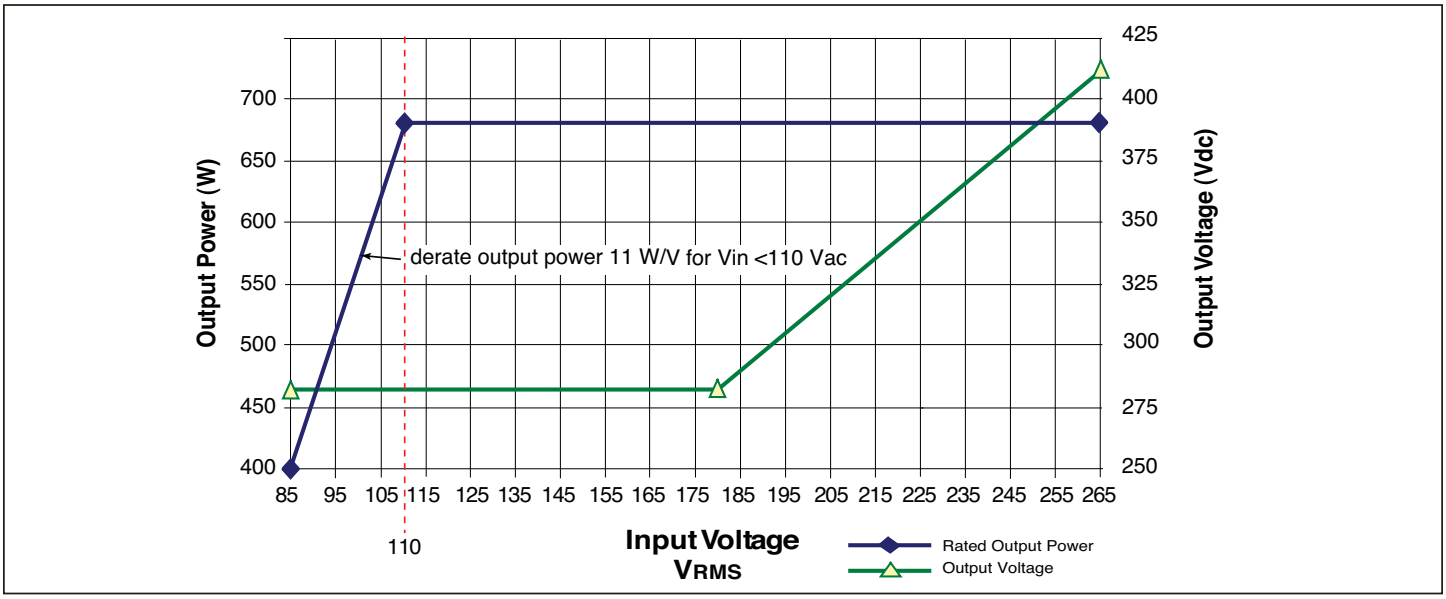

Figure 3 — *Output voltage and power rating versus input voltage*

Set your site on VICOR at vicorpower.com

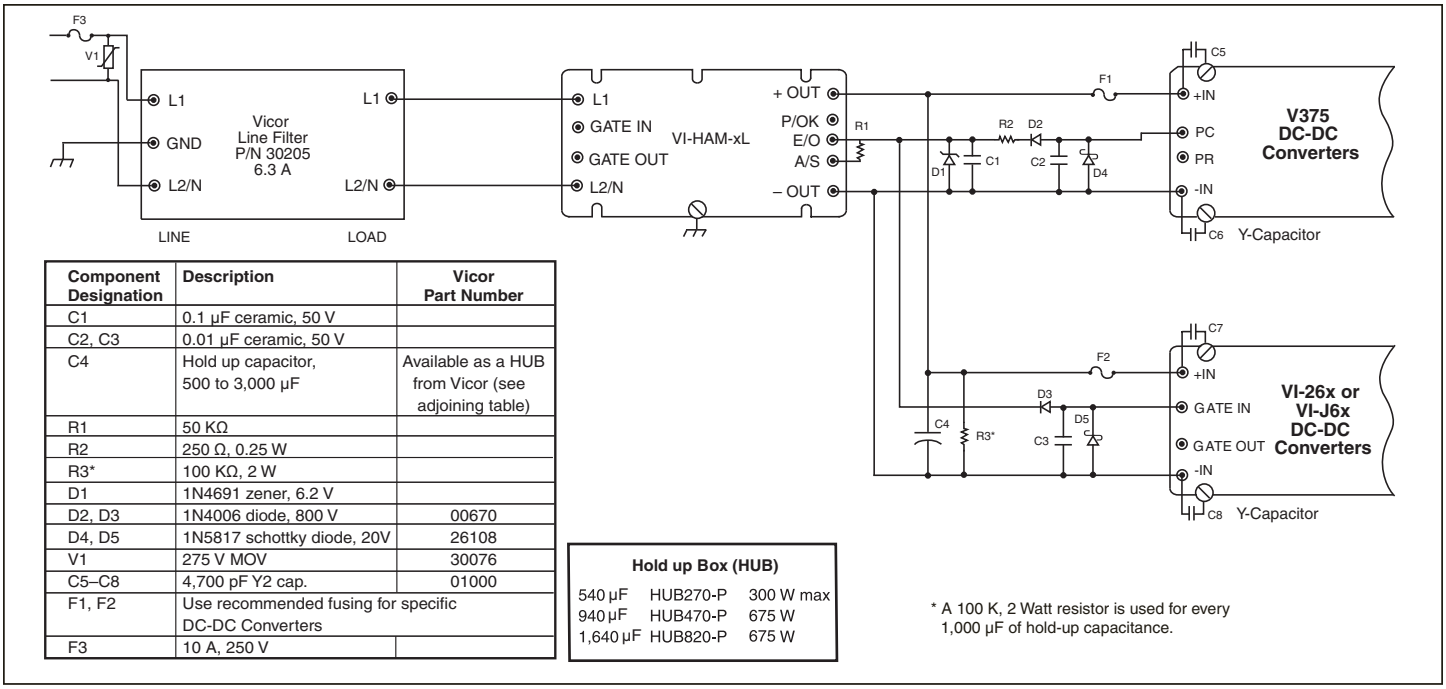

Component Designation	Description	Vicor Part Number
C1	0.1 µF ceramic, 50 V	
C2, C3	0.01 µF ceramic, 50 V	
C4	Hold up capacitor, 500 to 3,000 µF	Available as a HUB from Vicor (see adjoining table)
R1	50 KΩ	
R2	250 Ω, 0.25 W	
R3*	100 KΩ, 2 W	
D1	1N4691 zener, 6.2 V	
D2, D3	1N4006 diode, 800 V	00670
D4, D5	1N5817 schottky diode, 20V	26108
V1	275 V MOV	30076
C5–C8	4,700 pF Y2 cap.	01000
F1, F2	Use recommended fusing for specific DC-DC Converters	
F3	10 A, 250 V	

Hold up Box (HUB)

540 µF	HUB270-P	300 W max
940 µF	HUB470-P	675 W
1,640 µF	HUB820-P	675 W

* A 100 K, 2 Watt resistor is used for every 1,000 µF of hold-up capacitance.

Figure 4 — *Connection diagram HAM / DC-DC converters*

PIN FUNCTION / DESCRIPTION

L1 and L2/N (HAM)
An appropriate line filter is required to limit conducted emissions and ensure reliable operation of the HAM, see page 8. Connect single phase AC mains to the input of the line filter via a 10 A, 250 V fuse. Connect the output of the filter to L1 and L2/N of the HAM. Do not put an X-capacitor across the input of the HAM or use a line filter with an X-capacitor on its output as power factor correction may be impacted.

+IN, –IN (HAMD, BAMD)
These pins are connected to the output of the external bridge rectifier in HAMD / BAMD configurations (Figure 5).

GATE IN (HAM)
The user should not make any connection to this pin.

GATE IN (HAMD)
This pin provides line voltage envelope and phase information for power factor correction. This connection must be made through the synchronization diodes between the line filter and bridge rectifier (Figure 5).

GATE IN (BAMD)
The Gate In pin is an interface pin to the Gate Out pin of a HAMD or BAMD depending on configuration. The user should not make any other connection to this pin.

GATE OUT
The Gate Out pin is a synchronization pin for HAMD/BAMD arrays; the user should not make any other connection to this pin.

+OUT and -OUT
Connect the +OUT of the HAM to the +IN of the respective Vicor DC-DC converters with the recommended fuse. Connect the -OUT of the HAM to the -IN of the converters. In addition, an external hold-up capacitor of 1,000 µF with a minimum voltage rating of 450 Vdc, is required (across the output of the HAM) for 16 ms ride through time at full power (500 µF for half power, etc). This capacitor must be in close proximity to the HAM. Do not exceed 3,000 µF of total output capacitance. Lower values of capacitance may be used for reduced hold up requirements, but not less than 500 µF. Lower capacitance values may degrade power factor specifications.

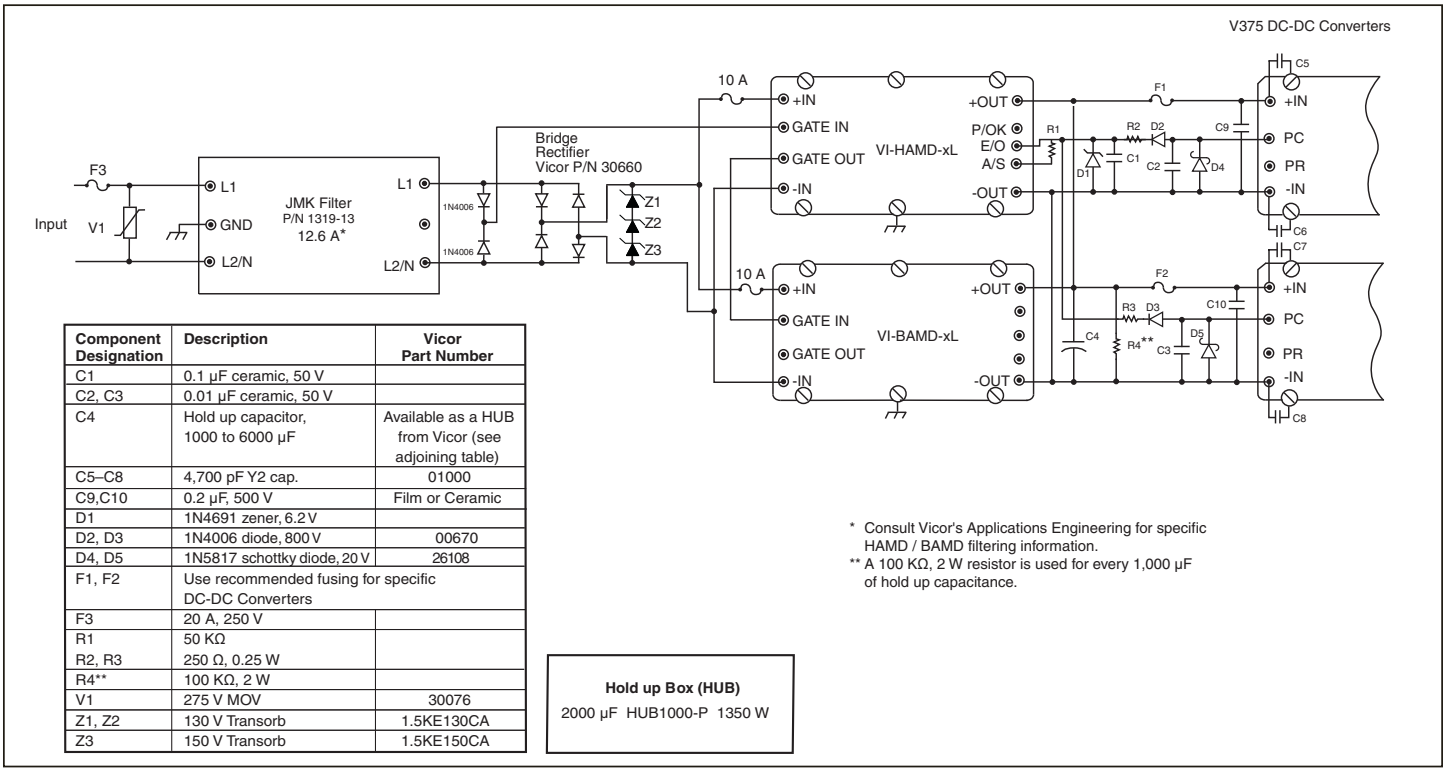

Component Designation	Description	Vicor Part Number
C1	0.1 µF ceramic, 50 V	
C2, C3	0.01 µF ceramic, 50 V	
C4	Hold up capacitor, 1000 to 6000 µF	Available as a HUB from Vicor (see adjoining table)
C5–C8	4,700 pF Y2 cap.	01000
C9,C10	0.2 µF, 500 V	Film or Ceramic
D1	1N4691 zener, 6.2 V	
D2, D3	1N4006 diode, 800 V	00670
D4, D5	1N5817 schottky diode, 20 V	26108
F1, F2	Use recommended fusing for specific DC-DC Converters	
F3	20 A, 250 V	
R1 R2, R3	50 KΩ 250 Ω, 0.25 W	
R4**	100 KΩ, 2 W	
V1	275 V MOV	30076
Z1, Z2	130 V Transorb	1.5KE130CA
Z3	150 V Transorb	1.5KE150CA

Figure 5 — *Connection Diagram, HAMD / BAMD / V375 DC-DC Converters*
HAMD-CL Driver HAM: No internal bridge rectifier or synchronization diodes.
BAMD-CL Booster HAM: Companion module to HAMD-CM used for additional output power. No internal bridge rectifier.

PIN FUNCTION / DESCRIPTION (CONT.)

A/S

The HAM provides a low voltage non isolated output Auxiliary Supply (A/S) that may be used to power primary side control and monitoring circuitry. This output is 19 – 23 Vdc, referenced to -OUT, at 3 mA max. Do not overload or short this output as the HAM will fail. A typical use for A/S is to power an optical coupler that isolates the Power OK signal (Figure 6).

E/O

The Enable Output (E/O) is used to inhibit the DC-DC converters at start up until the hold up capacitors are charged, at which time Enable is asserted high (open state, Figure 8). If the AC line fails, E/O goes low when the DC output of the HAM drops below 250 Vdc.

E/O must be connected to the Gate Input of all VI-26x and VI-J6x drivers and / or the PC pin of the V375 DC-DC converters (Figure 4); failure to do so may cause the converters to toggle on and off. If an external load is connected directly to the output of the HAM, do not apply the load until the output hold up capacitor(s) are fully charged.

In applications using VI-26x drivers and VI-26x boosters, the E/O pin should be connected to the Gate In pin of the driver module only, it is not necessary to connect this pin to boosters as they are controlled by their respective driver.

The E/O pin ancillary circuitry illustrated in Figures 4 and 5 provides transient immunity. The illustrated circuitry is the minimum required, see Figures 4 and 5.

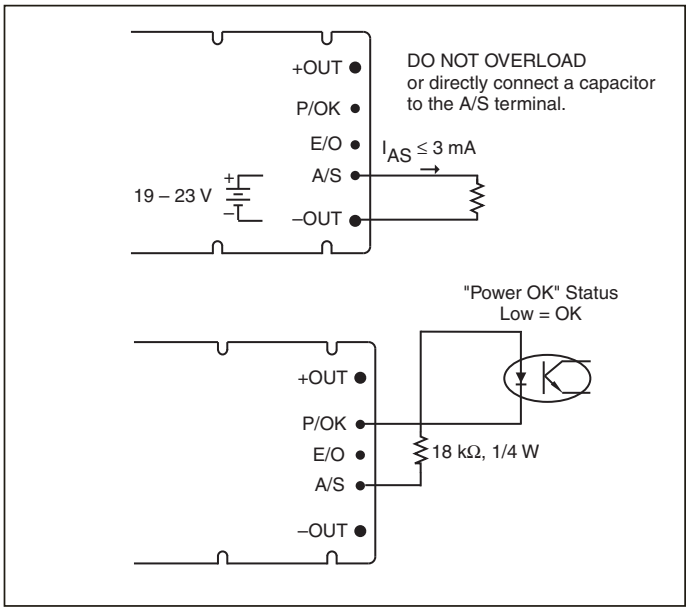

Figure 6 — *Auxiliary Supply (A/S)*

Set your site on VICOR at vicorpower.com

PIN FUNCTION / DESCRIPTION (CONT.)

P/OK

Power OK is a monitor signal that indicates the status of the AC mains and the DC output voltage of the HAM. P/OK is asserted (active low) when the output bus voltage is within normal operating range (>270 Vdc) and 20 – 25 ms after DC-DC converters are enabled by the E/O signal of the HAM. This provides sufficient time for the converters to turn on and their output(s) to stabilize prior to P/OK being asserted, (Figure 9). For momentary interruptions of AC power, the HAM will provide at least 16 ms of ride through or hold up time (with 1,000 µF output capacitor). On loss of power or brownout, (when the HAM output voltage drops below 270 Vdc) the P/OK signal will go to an open circuit state (Figure 7), signaling an impending loss of input power to the converter modules. P/OK will provide power fail warning at least 1 ms prior to converter shut down. When the HAM output voltage drops below 250 Vdc the converters are disabled via Enable Output (E/O).

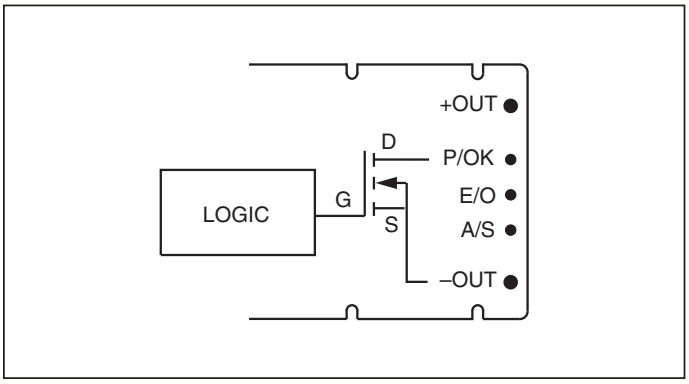

Figure 7 — *Power OK (P/OK)*

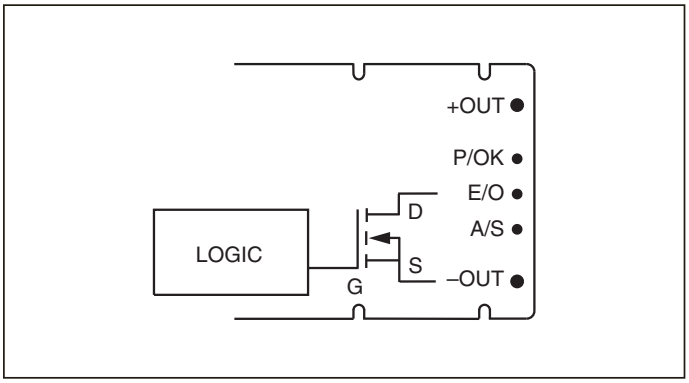

Figure 8 — *Enable / Output (E/O)*

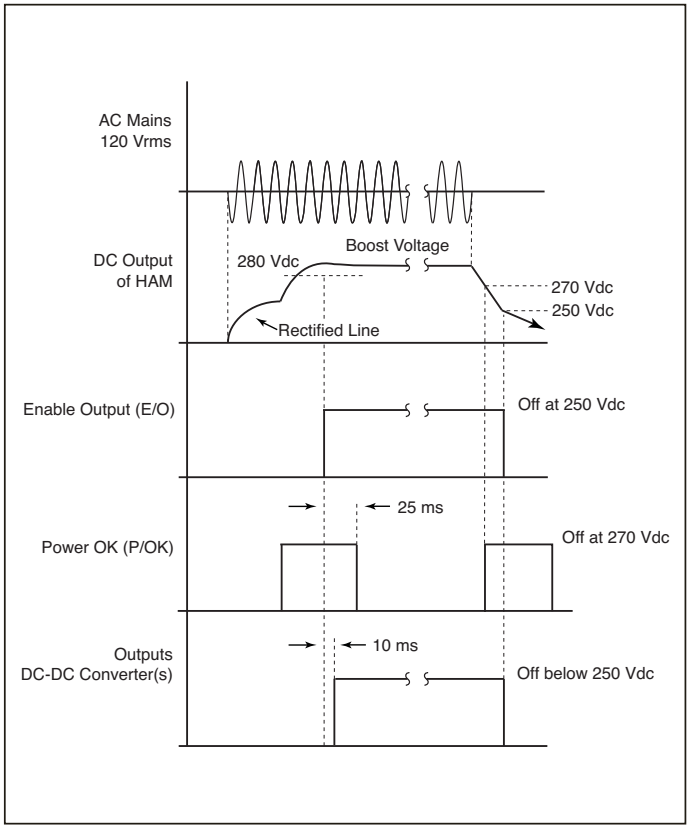

Figure 9 — *Start up / shut down timing diagram*

Line Filter for High Boost HAM

A line filter is required to provide attenuation of conducted emissions generated by the HAM module and to protect it from line transients. It also presents a well defined high frequency AC line impedance to the input of the HAM. To meet the listed specifications, Vicor's P/N 30205 line filter/transient suppressor or equivalent must be used, see Figure 10. The addition of a MOV external to this filter is required to meet normal mode transient surge requirements.

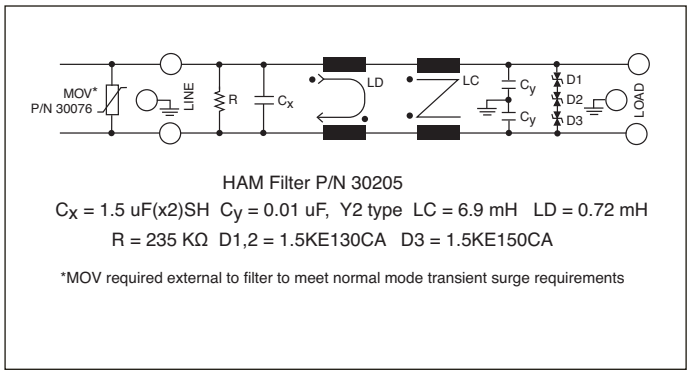

Figure 10 — *Required HAM filter, Vicor part # 30205*

For applications using HAMD + BAMD or where the user desires to construct a custom HAM filter, the filter should be designed following Figure 10, the schematic of Vicor's P/N 30205 filter. The current carrying capability of the inductors must be scaled proportionally to the number of HAM modules used. Inductance values must be selected according to Table 1. These limits are to ensure proper operation of the HAM and do not guarantee a system will meet conducted emissions specifications.

Parameter	Min	Typ	Max	Unit
Differential Mode Inductance (LD)	0.2	0.35	0.75	mH
Common Mode Inductance (LC)	3	6		mH

Table 1 — *HAM filter inductance range*

For applications requiring magnetic field shielding, do not place a ferrous EMI shield over the plastic cover of the HAM module. This can cause thermal problems due to induction heating effects.

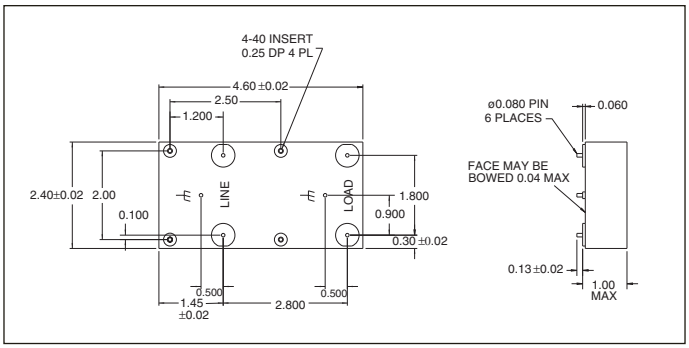

Figure 11 — *HAM filter #30205 mechanical diagram*

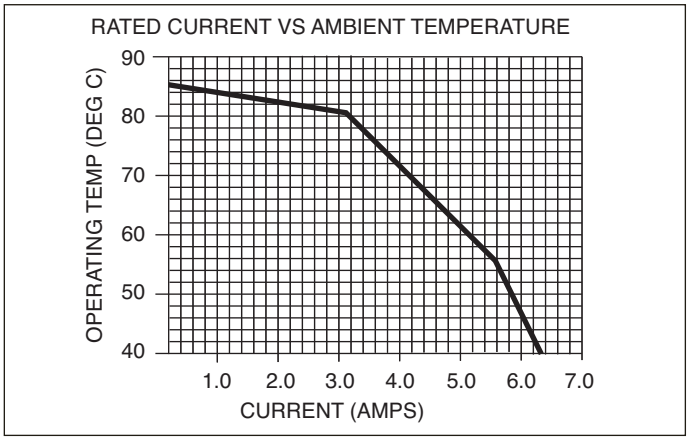

Figure 12 — *HAM filter #30205 current rating vs. temperature*

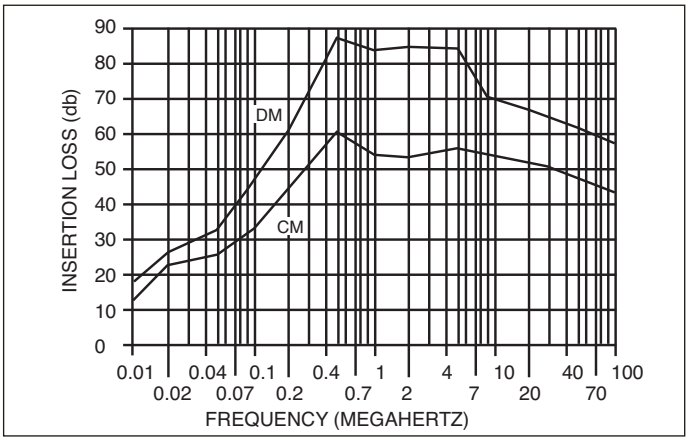

Figure 13 — *HAM filter #30205 insertion loss vs. frequency*

Set your site on VICOR at vicorpower.com

PIN FUNCTION / DESCRIPTION (CONT.)

Parameter	Min	Typ	Max	Unit
Operating voltage	85		250	Vac
Operating temperature (See Fig.12)	–20		40	°C
Leakage current at 264 Vac, 63 Hz (Either line to earth)			1.2	mA
Operating current			6.3	A
Dielectric withstand (line – case)			1500	Vac
Residual voltage after 1 sec.			34	V
Operating frequency	50		60	Hz
Agency Approvals		UL, CSA, TÜV		

Table 2 — *HAM filter part #30205 specifications*

Safety Notes

Each HAM, HAMD or BAMD module must be preceded by a safety agency recognized fast-blow 10A 3AG fuse.

The HAM is not isolated from the line – either input or output; a line isolation transformer must be used when making scope measurements. HAMs do not provide input to output isolation. Differential probes should be used when probing the input and output simultaneously to avoid destructive ground loops.

Protective Features

Over Temperature Shut Down
The HAM is designed to shut down when the temperature of the baseplate exceeds 90°C. Do not operate the HAM above its maximum operating temperature of 85°C.

Short Circuit Protection
The HAM contains output short circuit protection. Operation of this function does not clear the input fuse and the output will resume normal operation after removal of the fault.
A short period of time may be required to allow for cooling of an internal temperature sensor.

Output Over Voltage Protection
The HAM contains output over voltage protection. In the event the output voltage exceeds approximately 420 Vdc, the boost will decrease to maintain 420 Vdc on the output. When the peak of the AC line exceeds 420 V (approximately 293 Vac) the boost will have been reduced to zero and the E/O line will be pulled low shutting down the converters. Beyond this the protection circuit will be enabled and the output voltage will decrease.

MECHANICAL DRAWING

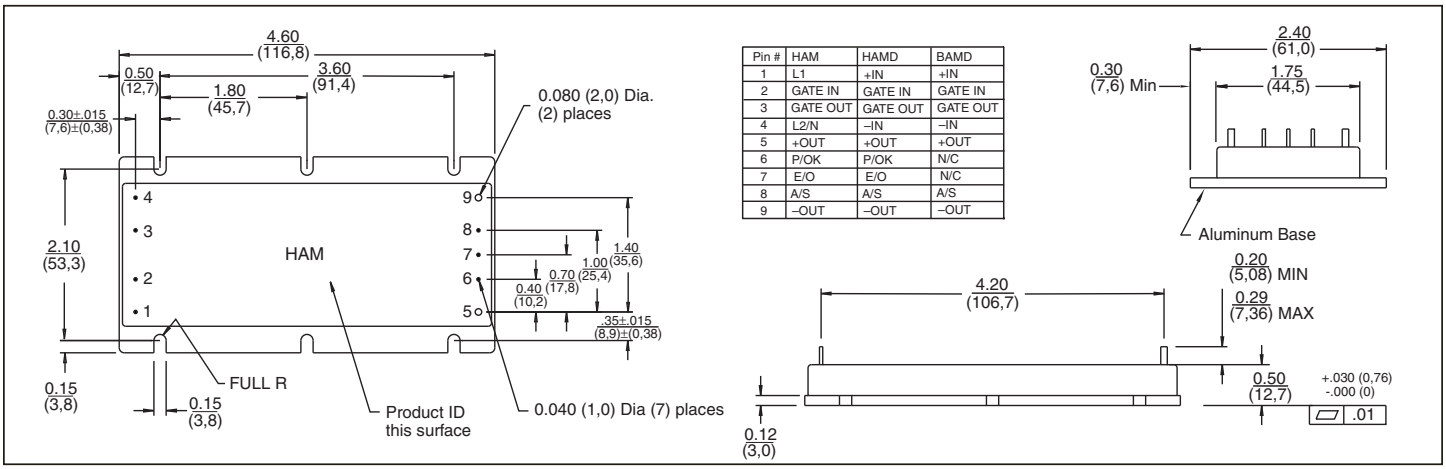

Figure 14 – *HAM / HAMD / BAMD Module Outline*

Note: *Mounting a High Boost HAM and Maxi, Mini or Micro DC-DC converter to the same heat sink will require the use of custom length standoffs or a step in the heat sink mounting surface. This is due to a mechanical stack up difference between the HAM and Maxi, Mini, and Micro converters that leads to incompatible baseplate height above the PCB.*

Set your site on VICOR at vicorpower.com

Warranty

Vicor products are guaranteed for two years from date of shipment against defects in material or workmanship when in normal use and service. This warranty does not extend to products subjected to misuse, accident, or improper application or maintenance. Vicor shall not be liable for collateral or consequential damage. This warranty is extended to the original purchaser only.

EXCEPT FOR THE FOREGOING EXPRESS WARRANTY, VICOR MAKES NO WARRANTY, EXPRESS OR IMPLIED, INCLUDING, BUT NOT LIMITED TO, THE WARRANTY OF MERCHANTABILITY OR FITNESS FOR A PARTICULAR PURPOSE.

Vicor will repair or replace defective products in accordance with its own best judgement. For service under this warranty, the buyer must contact Vicor to obtain a Return Material Authorization (RMA) number and shipping instructions. Products returned without prior authorization will be returned to the buyer. The buyer will pay all charges incurred in returning the product to the factory. Vicor will pay all reshipment charges if the product was defective within the terms of this warranty.

Information published by Vicor has been carefully checked and is believed to be accurate; however, no responsibility is assumed for inaccuracies. Vicor reserves the right to make changes to any products without further notice to improve reliability, function, or design. Vicor does not assume any liability arising out of the application or use of any product or circuit; neither does it convey any license under its patent rights nor the rights of others. Vicor general policy does not recommend the use of its components in life support applications wherein a failure or malfunction may directly threaten life or injury. Per Vicor Terms and Conditions of Sale, the user of Vicor components in life support applications assumes all risks of such use and indemnifies Vicor against all damages.

Vicor's comprehensive line of power solutions includes high density AC-DC and DC-DC modules and accessory components, fully configurable AC-DC and DC-DC power supplies, and complete custom power systems.

Information furnished by Vicor is believed to be accurate and reliable. However, no responsibility is assumed by Vicor for its use. Vicor components are not designed to be used in applications, such as life support systems, wherein a failure or malfunction could result in injury or death. All sales are subject to Vicor's Terms and Conditions of Sale, which are available upon request.

Specifications are subject to change without notice.

Intellectual Property Notice

Vicor and its subsidiaries own Intellectual Property (including issued U.S. and Foreign Patents and pending patent applications) relating to the products described in this data sheet. Interested parties should contact Vicor's Intellectual Property Department.

Vicor Corporation
25 Frontage Road
Andover, MA, USA 01810
Tel: 800-735-6200
Fax: 978-475-6715

email
Customer Service: custserv@vicorpower.com
Technical Support: apps@vicorpower.com