VGT-8115 Gyrotron Oscillator

Communications & Power Industries
microwave power products division

CPI gyrotrons were the first commercially available high-power, long-pulse/CW, high-frequency devices for plasma fusion experiments and other scientific and industrial applications. CPI-MPP provides an extensive line of gyrotrons that cover frequencies from 28-263 GHz with power levels ranging from 25 W to 1.4 MW.

The VGT-8115 gyrotron delivers up to 1.2 MW of output power at a frequency of 110 GHz for electron cyclotron heating and current drive in fusion plasmas.



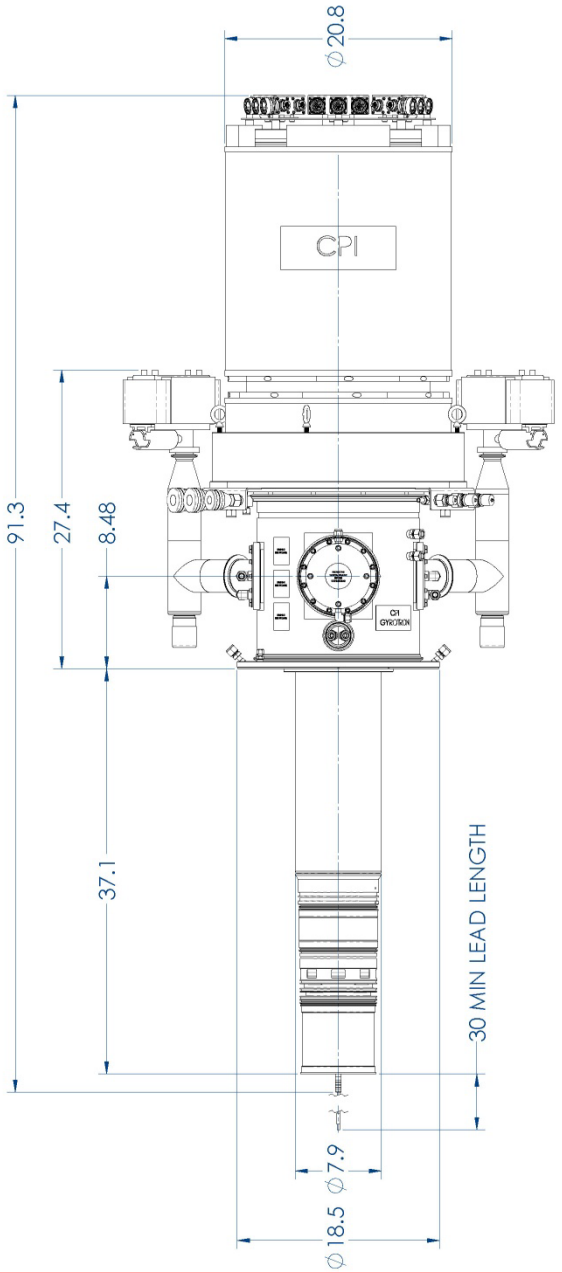

For additional information on gyrotrons, other CPI products, or a copy of our catalog-on-disk, please contact:
CPI Microwave Power Products, 811 Hansen Way, Palo Alto, CA 94303-0750
Telephone: 650-846-3172, Fax: 650-856-0705, Email: marketing@cpii.com

Rev: 2012-03-09

VGT-8115 Gyrotron Oscillator

Communications & Power Industries
microwave power products division

Cathode Stem and Ceramic Assembly



Output Power vs. Cathode Voltage

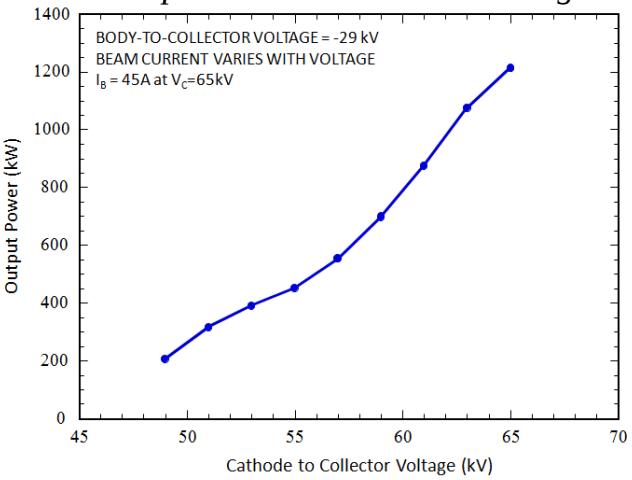

CVD Diamond Window Disc



Output Power vs. Beam Current

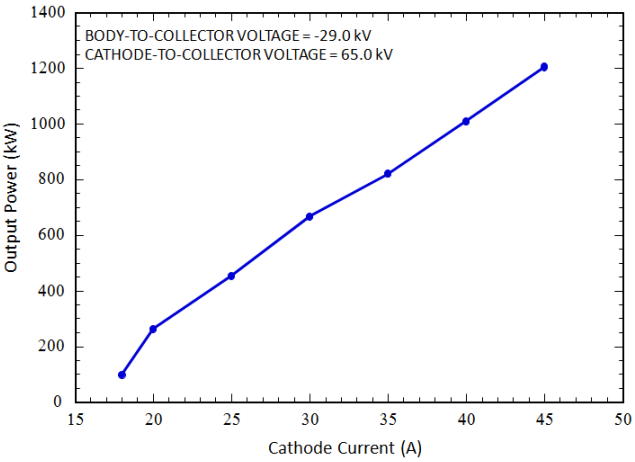

Features

- High Power, High Efficiency
- Long Pulse Operation
- Gaussian Output Beam
- CVD Diamond Output Window
- Diode Electron Gun
- Single-Stage Depressed Collector
- Cryogen-Free Superconducting Magnet

Typical Operating Parameters

Power Output	1200 kW
Pulse Length	10 sec
Beam Voltage	94 kV
Cathode Voltage	65 kV
Beam Current	45 A
Frequency	110±0.2 GHz
Efficiency	41%
Gyrotron Weight	1800 lbs
Output Mode	TEM_{00}

For additional information on gyrotrons, other CPI products, or a copy of our catalog-on-disk, please contact:
CPI Microwave Power Products, 811 Hansen Way, Palo Alto, CA 94303-0750
Telephone: 650-846-3172, Fax: 650-856-0705, Email: marketing@cpii.com

Rev: 2012-03-09