Honeywell

VF526DT

Bipolar Latch, Dual Hall-effect Digital Position Sensor with Speed and Direction Outputs



DESCRIPTION

The VF526DT Bipolar Latch, Dual Hall-effect Digital Position Sensor has two distinct Hall sensing elements precisely located 1,4 mm [0.055 in] apart on a single integrated circuit chip. The elements are encapsulated in a thermoset molding material.

The two active Hall latches provide speed and direction indication of a magnetic gradient (such as a rotating ring magnet) across the face of the package.

The miniature, 4-pin SOT-89B package surface mounts on PC (Printed Circuit) boards and flexible circuits.

The VF526DT's built-in temperature compensation is designed to match the temperature coefficient of low-cost magnets, allowing for a reliable, yet cost-effective, sensor-magnet combination.

A unique, regulator circuit provides extremely stable operation with supply voltages from 3.4 Vdc to 24 Vdc. It can directly interface with many electronic components without buffering or compensation circuitry.

FEATURES AND BENEFITS

- Temperature-compensated magnetics and ultra-low offset drift with temperature provides a stable output over a full temperature range of -40 °C to 125 °C [-40 °F to 257 °F].
- Single, miniature 4-pin SOT-89B plastic package supplied on tape and reel for automated assembly, allowing potential savings in PC board space and labor cost.
- Two separate built-in Hall sensors and their associated logic circuitry provide a frequency signal for speed output and a logic level (high or low) signal for direction output, potentially replacing multiple sensors and electronic components.
- Wide operating voltage range of 3.4 Vdc to 24 Vdc increases application flexibility.
- Tested to moisture sensitivity similar to JEDEC J-STD-020B, MSL Level 1, allowing the VF526DT to be used in environments where humidity may be a problem.
- RoHS-compliant materials meet Directive 2002/95/EC.

POTENTIAL APPLICATIONS

Transportation

- Anti-pinch electric motor control systems for:
  - power windows
  - power seats (headrest)
  - power sliding doors
  - sunroofs
- Magnetic encoding for electronic steering systems

Industrial

- Motion control systems for pulleys and belts
- Garage door openers and sliding doors
- Position and velocity detection in industrial equipment
- Linear displacement sensing (using a magnetic strip of alternating poles)

VF526DT

Table 1. Absolute Maximum Ratings[1]

Characteristic	Sym.	Min.	Max.	Unit
Supply voltage	Vcc	-0.5	30	V
Output voltage (OFF)	Vout	-0.5	30	V
Output ON current	Iout	–	10	mA
Storage temperature	Ts	-65 [-85]	160 [320]	°C [°F]
Operating temperature	T	-40 [-40]	150 [302]	°C [°F]
ESD: IEC 801-2, Lev 1 MIL-STD-883, Method 3015.7	ESD	 2 4	 – –	KV
Magnetic flux		no limit		–

Note 1: Absolute maximum ratings are the extreme limits that the device will withstand without damage to the device. However, the electrical and mechanical characteristics are not guaranteed as the maximum limits (above recommended operating conditions) are approached, nor will the device necessarily operate at absolute maximum ratings.



Table 2. Specifications

Characteristic	Sym.	Condition	Min.	Typ.	Max.	Unit
Magnetic actuation type	bipolar latch					
Output type	dual open collector, sinking (speed and direction)					
Supply voltage	Vcc	–	3.4	–	24	Vdc
Operating temperature	Temp	Vcc = 3.4 V to 24 V	-40 [-40]	–	125 [257]	°C [°F]
Supply current (OFF)	Ioff	Vcc = 24 V, -40 °C < T < 125 °C, Vout = 24 V, B<MIN REL	–	–	12	mA
Supply current (ON)	Ion	Vcc = 24 V, -40 °C < T < 125 °C, Isink = 5 mA, B<MAX OP	–	–	14	mA
Load current	Isink	Vcc = 24 V, -40 °C < T < 125 °C, Isink = 5 mA, B<MAX OP	–	–	5	mA
Output saturation	Vsat	Vcc = 24 V, -40 °C < T < 125 °C, Isink = 5 mA, B<MAX OP	–	–	0.4	V
Circuit speed to direct delay	Td	Vcc = 12 V, RL = 1.6 kOhm, CL = 20 pF	–	–	5	µs
Rise time	Tr	Vcc = 12 V, RL = 1.6 kOhm, CL = 20 pF	–	–	1.5	µs
Fall time	Tf	Vcc = 12 V, RL = 1.6 kOhm, CL = 20 pF	–	–	1.5	µs
Frequency	Top	Vcc = 12 V, RL = 1.6 kOhm, CL = 20 pF	<1	–	>1000	Hz
Operate point	Bop	T = 25 °C -40 °C < T < 125 °C	– 60	130 –	– 200	Gauss
Release point	Brel	T = 25 °C -40 °C < T < 125 °C	– -60	-130 –	– -200	Gauss
Differential (OP-REL)	Diff	T = 25 °C -40 °C < T < 125 °C	– 200	260 –	– 320	Gauss
Symmetry ([OP +REL]/2)	Sym	T = 25 °C -40 °C < T < 125 °C	– -65	0 –	– 65	Gauss
Package style	SOT-89B					
Moisture sensitivity test	similar to JEDEC J-STD-020B, MSL Level 1					
Package quantity	available in 1000/tape and reel					

Figure 1. Output Timing Diagram

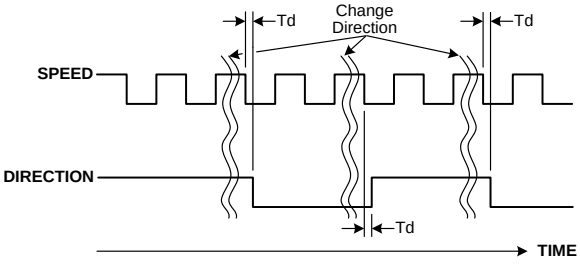

Bipolar Latch, Dual Hall-effect Digital Position Sensor with Speed and Direction Outputs

Figure 2. Sensor Function Diagram with Customer-Supplied Magnet

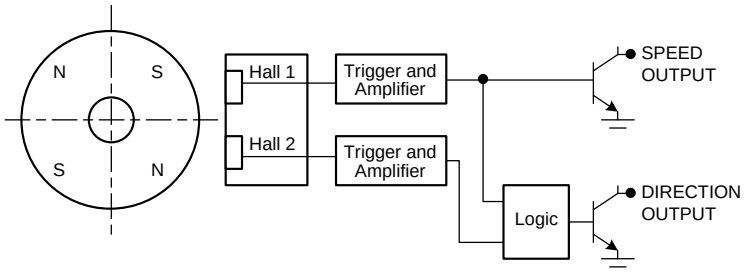

When the change in magnetic flux at Hall 1 leads the change at Hall 2, the direction output is HIGH; when it follows Hall 2, the direction output is LOW.

Figure 3. Mounting Dimensions (For reference only. mm/[in].)

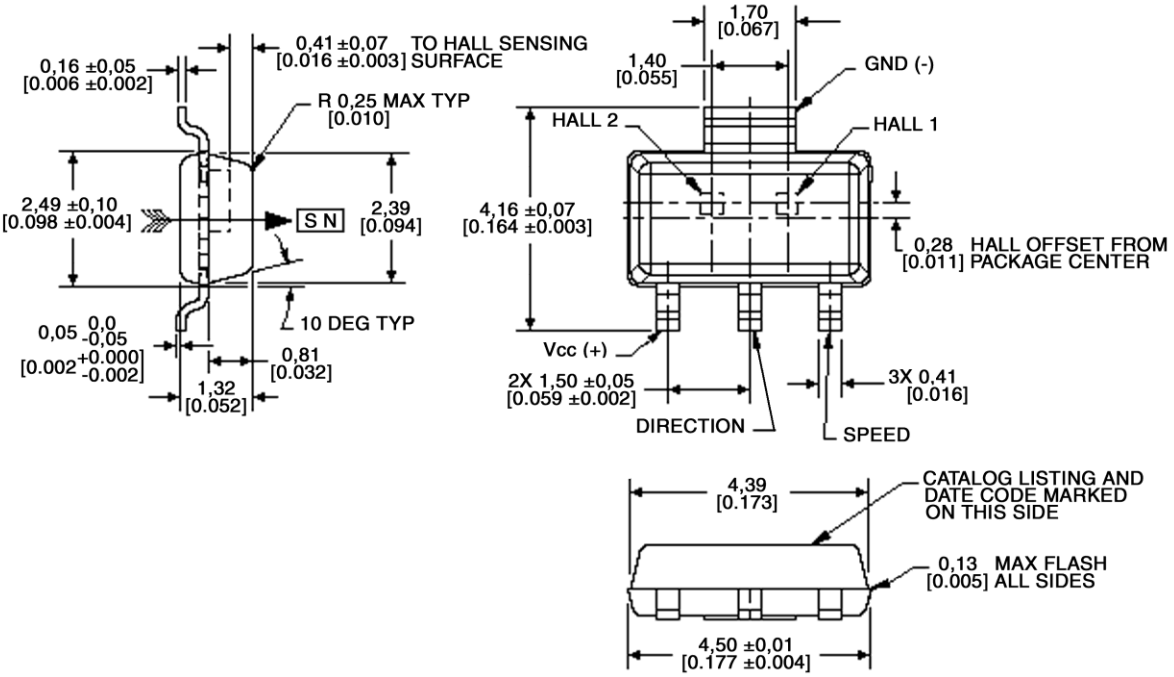

Tape

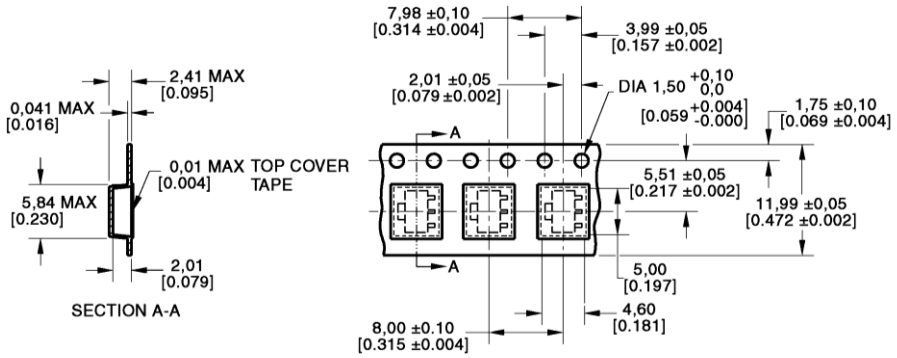

Solder Pad

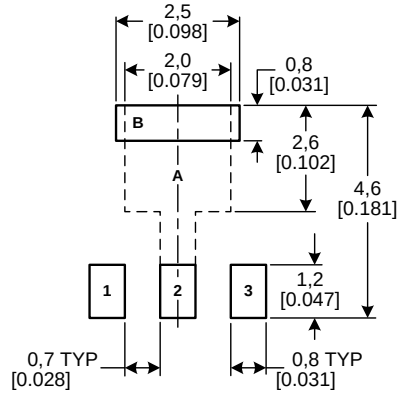

Figure 3. Mounting Dimensions (continued)

Reel

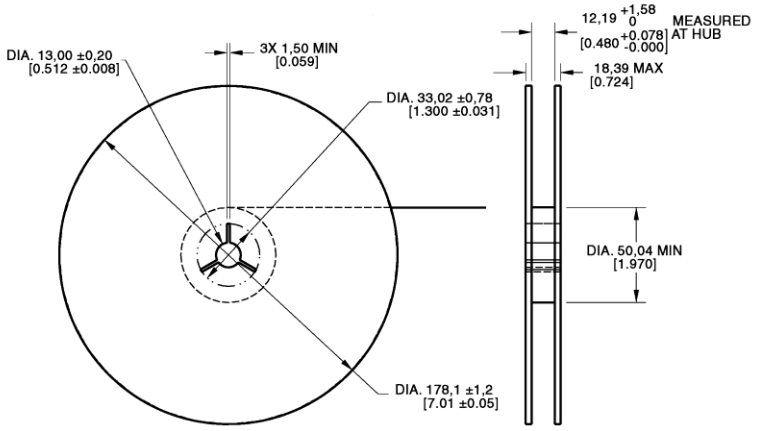

Order Guide

Catalog Listing	Description
VF526DT	Bipolar latch, dual hall-effect digital position sensor with speed and direction outputs, on tape and reel (1000 pcs per reel)

⚠ WARNING

MISUSE OF DOCUMENTATION

- The information presented in this product sheet is for reference only. Do not use this document as a product installation guide.
- Complete installation, operation, and maintenance information is provided in the instructions supplied with each product.

Failure to comply with these instructions could result in death or serious injury.

WARRANTY/REMEDY

Honeywell warrants goods of its manufacture as being free of defective materials and faulty workmanship. Honeywell's standard product warranty applies unless agreed to otherwise by Honeywell in writing; please refer to your order acknowledgement or consult your local sales office for specific warranty details. If warranted goods are returned to Honeywell during the period of coverage, Honeywell will repair or replace, at its option, without charge those items it finds defective. **The foregoing is buyer's sole remedy and is in lieu of all other warranties, expressed or implied, including those of merchantability and fitness for a particular purpose. In no event shall Honeywell be liable for consequential, special, or indirect damages.**

While we provide application assistance personally, through our literature and the Honeywell web site, it is up to the customer to determine the suitability of the product in the application.

Specifications may change without notice. The information we supply is believed to be accurate and reliable as of this printing. However, we assume no responsibility for its use.

⚠ WARNING

PERSONAL INJURY

DO NOT USE these products as safety or emergency stop devices or in any other application where failure of the product could result in personal injury.

Failure to comply with these instructions could result in death or serious injury.

SALES AND SERVICE

Honeywell serves its customers through a worldwide network of sales offices, representatives and distributors. For application assistance, current specifications, pricing or name of the nearest Authorized Distributor, contact your local sales office or:

E-mail: info.sc@honeywell.com

Internet: www.honeywell.com/sensing

Phone and Fax:

Asia Pacific	+65 6355-2828
	+65 6445-3033 Fax
Europe	+44 (0) 1698 481481
	+44 (0) 1698 481676 Fax
Latin America	+1-305-805-8188
	+1-305-883-8257 Fax
USA/Canada	+1-800-537-6945
	+1-815-235-6847
	+1-815-235-6545 Fax

Sensing and Control
Honeywell
1985 Douglas Drive North
Golden Valley, MN 55422
www.honeywell.com/sensing

005870-2-EN IL50 GLO Printed in USA
December 2009
© 2009 Honeywell International Inc. All rights reserved.