VD-60B Metal Enclosed Switching Power Supply

Features

- ·Universal AC input - full range
- ·Short-circuit, over-voltage and overload protection
- ·Cooling by free air convection
- ·LED indicator for power on
- ·Fixed switching frequency at 54KHz
- ·2 year warranty



	CH1	CH2
DC output voltage	5V	24V
Output V. tolerance	±2%	±5%
Output rated current	3A	1.8A
Output current range	0.3-6A	0.2-2.2A
Ripple & noise	75mVp-p	150mVp-p
Line regulation	±0.5%	±0.5%
Load regulation	±0.5%	±4.0%
Rated power	56W	
Efficiency	76%	
DC voltage adj.	CH1:4.75-5.5V	
Input voltage range	85~264VAC; 120~370VDC	
AC current	2A/115V 1A/230V	
Inrush current	cold start 30A/115V 60A/230V	
Leakage current	<3.5mA/240VAC	
Overload protection	105%~150% type: Hiccup mode, recovers automatically after fault condition is removed	
Temperature coefficient	±0.03% / ºC (0~50ºC) ON +5V output	
Set up, rise, hold up time	300ms, 50ms, 80ms/230VAC 800ms, 50ms, 10ms/115VAC	
Vibration	10~500Hz, 2G 10 min./1 cycle, period of 60 min. each axes	
Withstand voltage	I/P-O/P: 3KVAC, I/P-FG: 1.5KVAC, O/P-FG: 0.5KVAC, for 1 min.	
Isolation resistance	I/P-O/P, I/P-FG, O/P-FG:500VDC / 100M Ohms min.	
Working temp., humidity	-10°C~+60% (refer to output derating curve), 20%-90% RH	
Storage temp., humidity	-20°C~+85°C, 10%-95% RH	
Dimensions	6.26x3.82x1.50inches (159x97x38mm)	
Weight	1.21 lb. (0.55Kgs)	
Safety standards	UL1012, UL60950, TUV EN60950	
EMC standards	EN61000-3-2, -3, Class A	

Notes:

1. All parameters are specified at 230VAC input, rated load, 25°C 70% ambient
2. Tolerance includes set up tolerance, line regulation, load regulation
3. Ripple & noise are measured at 20MHz by using a 12” twisted pair terminated with a 0.1uF & 47 uF capacitor

***V-Infinity reserves the right to make changes to its products or to discontinue any product or service without notice, and to advise customers to verify the most up-to-date product information before placing orders. V-Infinity assumes no liability or responsibility for customer’s applications using V-Infinity products other than repair or replacing (at V-I’s option) V-Infinity products not meeting V-I’s published specifications. Nothing will be covered outside of standard product warranty.**

Block Diagram

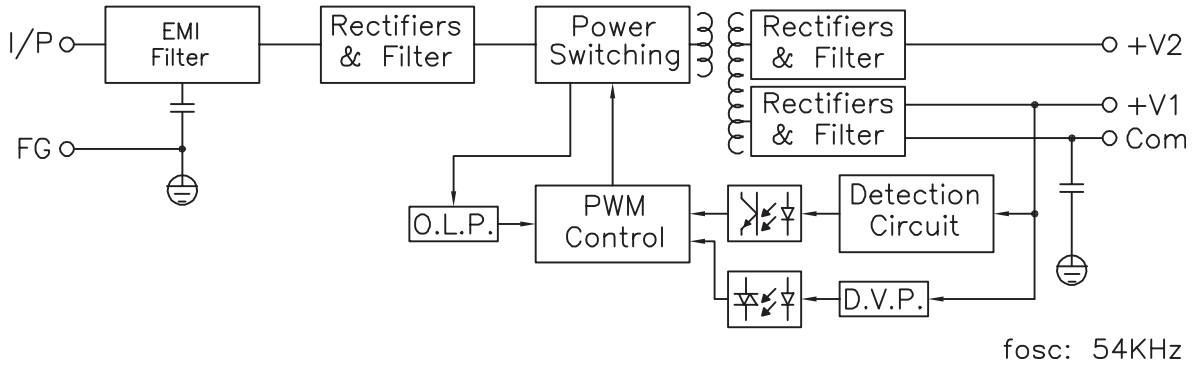

Output Derating

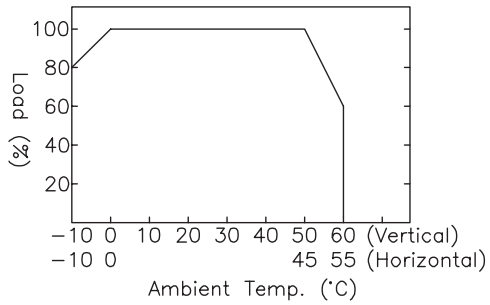

Static Characteristics

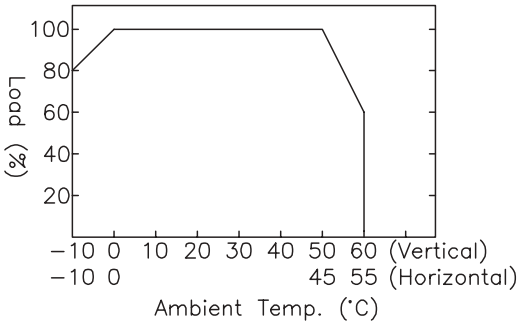

Dimensions (mm)

Case: 901
Terminal Pin No. Assignment
Pin 1: AC Input
Pin 2: AC Input
Pin 3: FG
Pin 4: DC Output +V2
Pin 5: DC Output +V1
Pin 6: DC Output Com
Pin 7: DC Output Com

