The history of revision change for the specification

Document	REV.	Modified date	Description
CYNVC-199-052	A0	2019.9.24	New approval
CYNVC-199-052	A1	2020.1.31	1. Sep., 2019 -> Jan., 2020 2. Year Code: 2019 = 9 -> 2020 = 0 3. Remove frequency: (1MHz) from Features

Power Choke Coil VCUW104T MS63 type

AEC-Q200

Features

High performance (Isat) realized by metal dust core.
Low profile：Thickness max. 4.0mm
Low loss realized with low DCR
Capable of corresponding high frequency
Compliance with RoHS and Halogen Free
AEC-Q200 qualified

Application

Automotive applications

Outline Dimensions

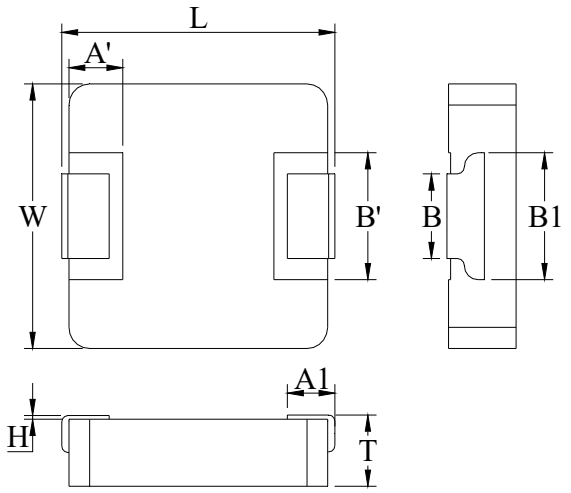

Code	Dimensions (mm)
L	10.85 ± 0.35
W	10.0 ± 0.3
T	3.8 ± 0.2
A1	2.0 ± 0.5
A’	2.5 ± 0.1
B	3.0 ± 0.3
B1	6.5 ± 0.3
B’	6.0 ± 0.3
H	0 ~ + 0.15

Recommend Land Pattern Dimensions

The customer shall determine the land dimensions shown below after confirming and safety.

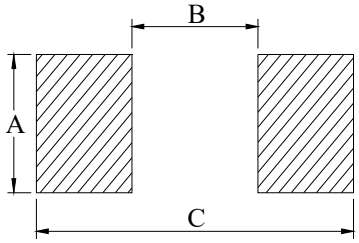

A	3.25
B	5.81
C	12.06

Unit : mm

Marking and Date Code

The point on the top surface represents winding direction of choke.

(1) Marking

The inductor is marked with a 3-digit code

Example – – 68.0μH → 680

(2) Date Code

X **X X**
(1) (2)
X X X
(3)

Where (1) Year Code

Ex : 2020 = 0

(2) Weekly Code

Serial number : 01 ~ 53

(3) Taping No.

Serial number : 001 ~ ZZZ

Upside of Chip

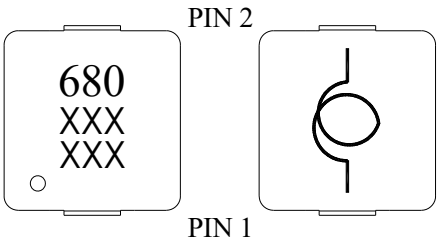

Coil clockwise around

Specifications

Part Number	L0 ◇ Inductance (μH) @ (0A)	R_{dc} (mΩ) ◇		Heat Rating Current DC Amps. Idc (A)		Saturation Current DC Amps. Isat (A)	
		Typical	Maximum	Typical	Maximum	Typical	Maximum
VCUW104T-680MS63	68.0	183	210	2.8	2.5	4.0	3.4
VCUW104T-101MS63	100.0	240	288	2.4	2.2	2.9	2.5

◇：Significant Characteristic

* ：If you require another part number please contact with us.

**：Inductance Tolerance ± 20%

Note 1.： All test data is referenced to 25℃ ambient.

Note 2.： Test Condition:100KHz, 1.0Vrms

Note 3.： Idc : DC current (A) that will cause an approximate △T of 40℃

Note 4.： Isat : DC current (A) that will cause L0 to drop approximately 30%

Note 5.： Operating Temperature Range -55°C to + 165°C

Note 6.： The part temperature (ambient + temp rise) should not exceed 165°C under the worst case operating conditions. Circuit design, component placement, PCB trace size and thickness, airflow and other cooling provision all affect the part temperature. Part temperature should be verified in the end application.

Note 7.： The rated current as listed is either the saturation current or the heating current depending on which value is lower.

Note 8.： Cleaning Process Note

(a) If this power choke is dipped in the cleaning agent, such as toluene, xylene, ketone, and ether system, there is a possibility that the performance decreases greatly

(b) The high power ultrasonic washing may damage the choke body.

(c) Please contact us if you need the cleaning via the above agents or ultrasonic washing.

Current Characteristic

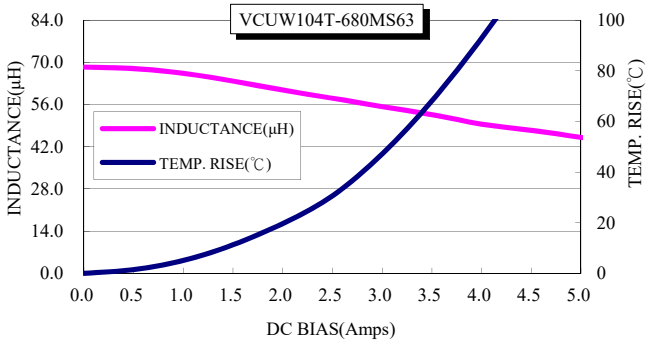

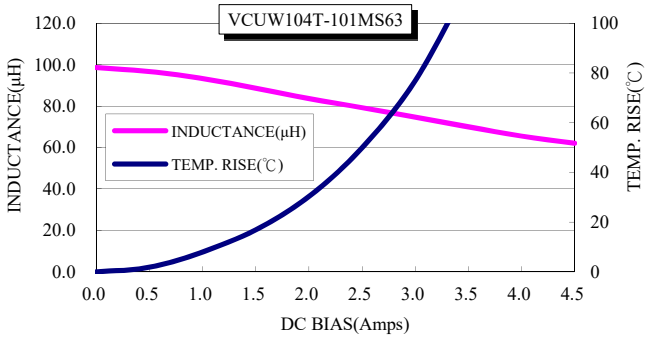

Packaging

(1) Tape packaging dimensions

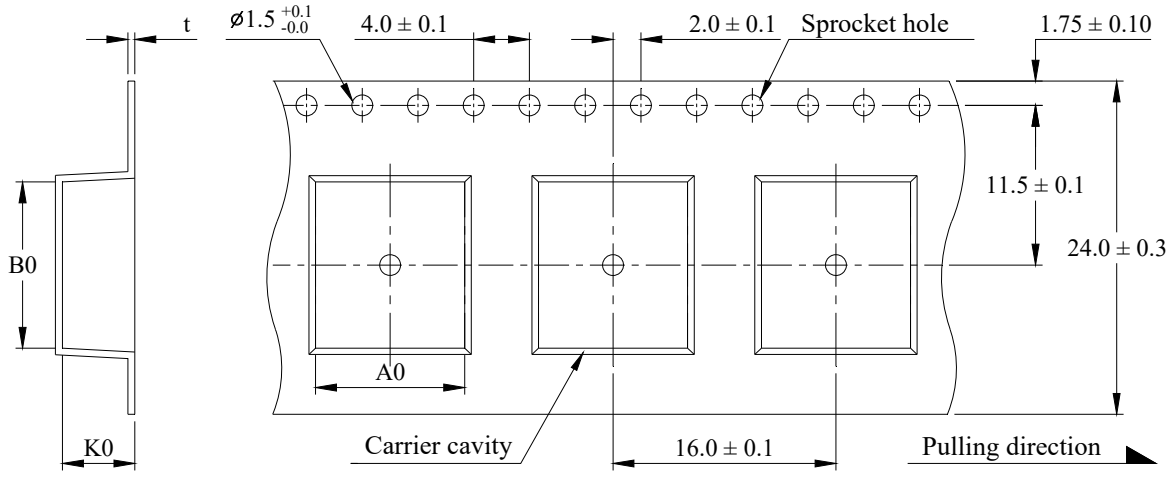

Dimensions Code (mm)				UNITS/REEL
A0	**B0**	**K0**	**t**	
10.7 ± 0.1	12.0 ± 0.1	4.5 ± 0.1	0.35 ± 0.05	500

(2) Tape Direction

The direction shall be seen from the top cover tape side.

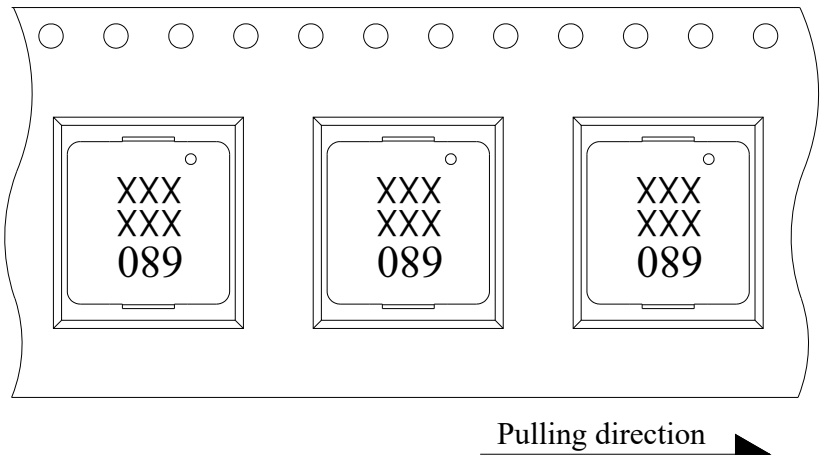

(3) Reel dimensions

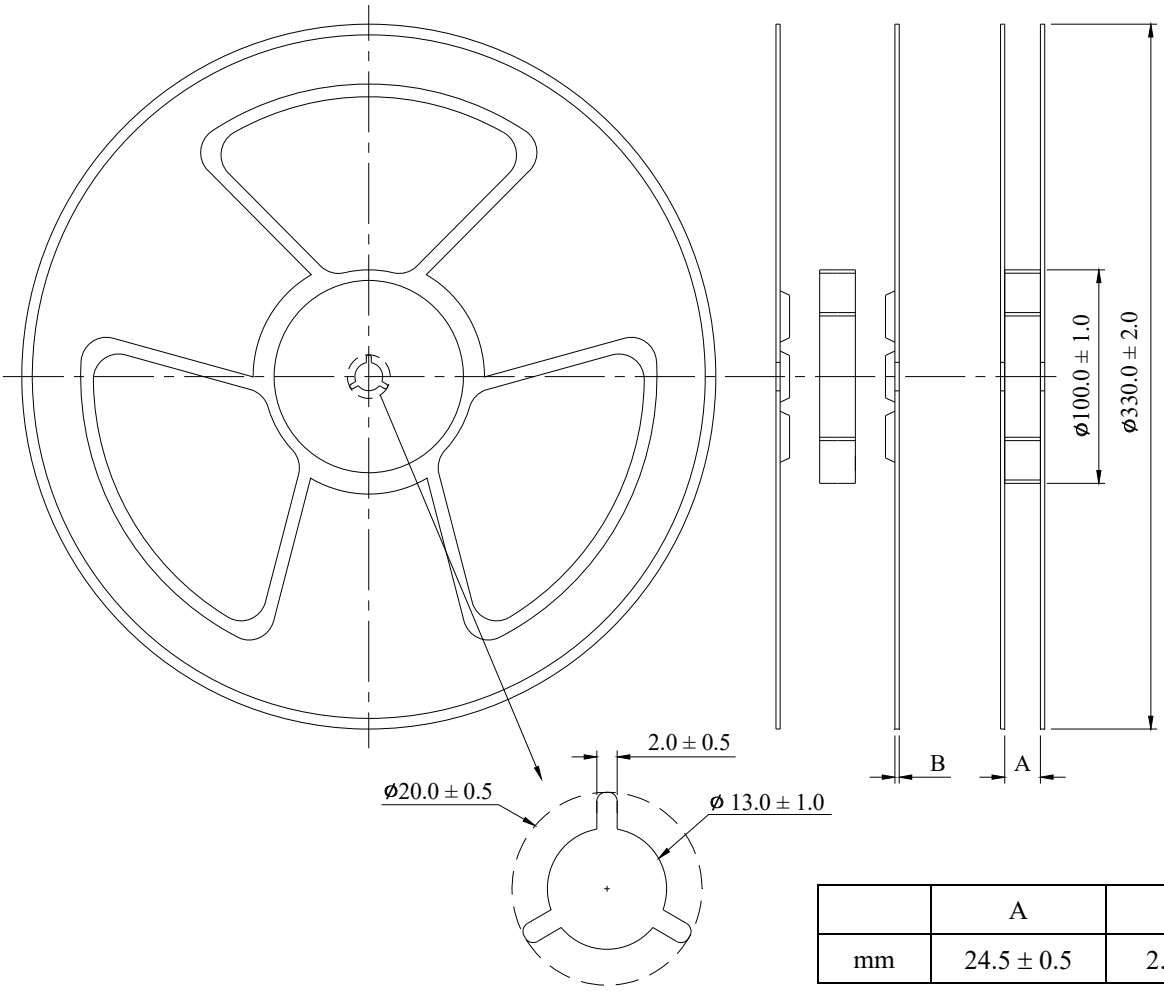

	A	B
mm	24.5 ± 0.5	2.0 ± 0.2

(4) Peel force of top cover tape

The peel speed shall be about 300 mm/minute

The peel force of top cover tape shall be between 0.1 to 1.3N

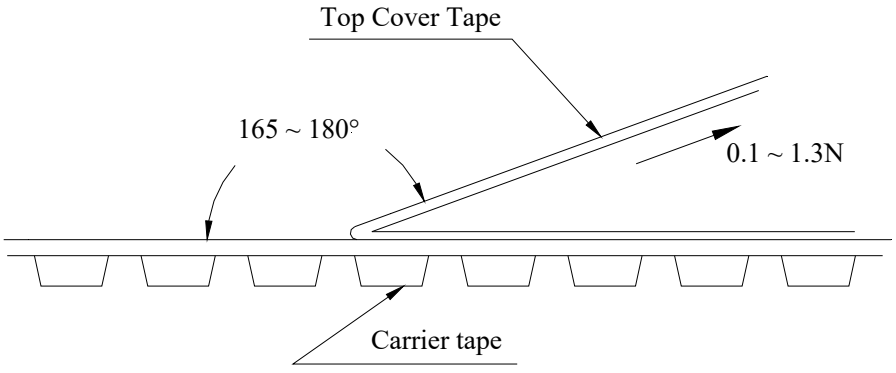

Reflow Profile

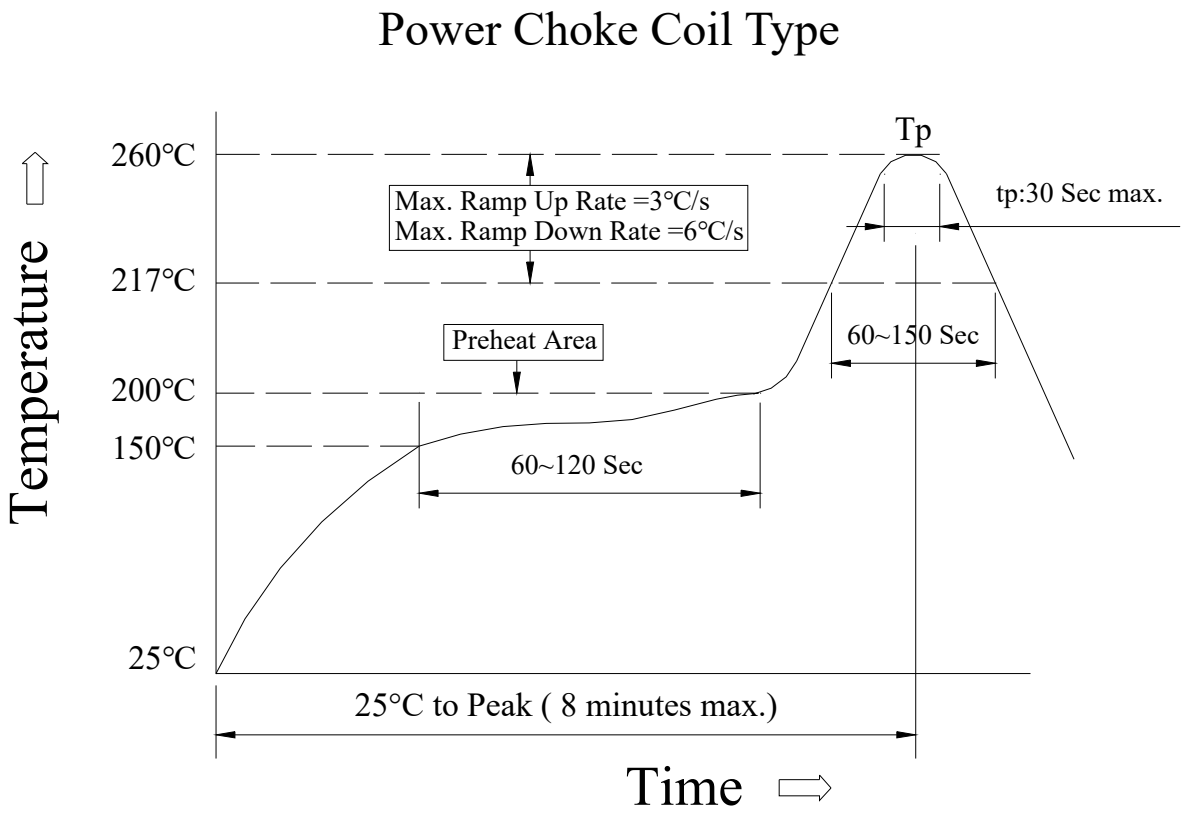

(1) Reflow Soldering Method :

Reflow Soldering	Tp:255~260℃	Max.30 seconds (tp)
	217℃	60~150 seconds
Pre-Heat	150 ~ 200℃	60~120 seconds
Time 25℃ to peak temperature	8 minutes max.	

(2) Soldering iron Method : 350± 5℃ max.3 seconds