VCUT05E1-SD0

1- Line Bi-directional TVS Diode

Features

- Ultra low leakage: nA level
- Operating voltage: 5V
- Low Clamping Voltage
- Complies with following standards:
  – IEC 61000-4-2 (ESD) immunity test
    Air discharge: ±15kV
    Contact discharge: 8kV
  – IEC61000-4-4 (EFT) 40A (5/50ns)
  – IEC61000-4-5 (Lightning) 5A (8/20μs)
- RoHS Compliant

Dimensions DFN0603

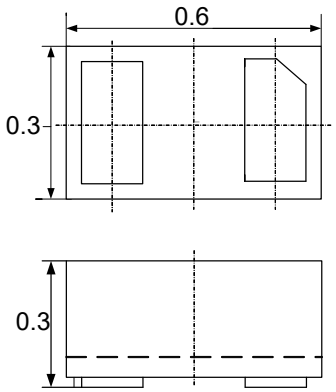

Applications

- FireWire
- Display ports
- MDDI ports
- Digital Visual Interface (DVI)
- Cellular handsets & accessories
- Computer and peripherals

Pin Configuration

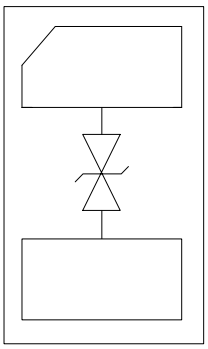

Mechanical Characteristics

- Package: DFN0603
- Lead Finish: Lead Free
- UL Flammability Classification Rating 94V-0
- Quantity Per Reel:10,000pcs
- Reel Size:7 inch
- Device Marking:A5

Absolute Maximum Ratings(Tamb=25°C unless otherwise specified)

Parameter	Symbol	Value	Unit
Peak Pulse Power (8/20μs)	Ppp	80	W
ESD per IEC 61000−4−2 (Air)	V_{ESD}	±15	Kv
ESD per IEC 61000−4−2 (Contact)		±8	
Operating Temperature Range	T_J	-55 to +125	℃
Storage Temperature Range	T_{STJ}	-55 to +150	℃

Download from alldatasheet.com

Electrical Characteristics(TA=25°C unless otherwise specified)

Parameter	Symbol	Test Condition	Min	Typ	Max	Unit
Reverse Working Voltage	V_{RWM}				5	V
Breakdown Voltage	V_{BR}	I_T = 1mA	5.6			V
Reverse Leakage Current	I_R	V_{RWM} = 5V			1	μA
Clamping Voltage	V_C	I_{PP} = 1A (8 x 20 μs pulse)			9.8	V
Clamping Voltage	V_C	I_{PP} = 5A (8 x 20 μs pulse)			15	V
Junction Capacitance	C_J	V_R = 0V, f = 1MHz		15		pF

Characteristic Curves

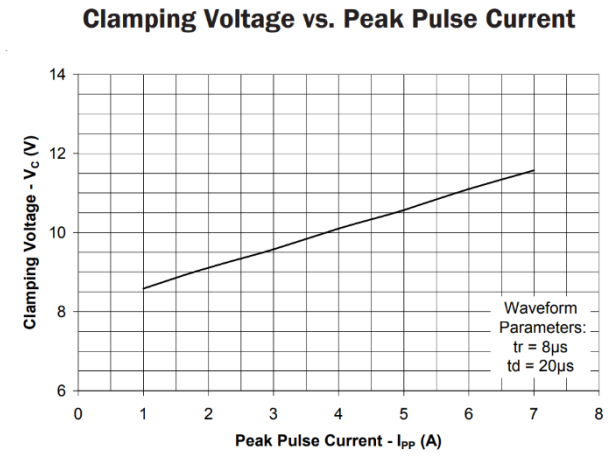

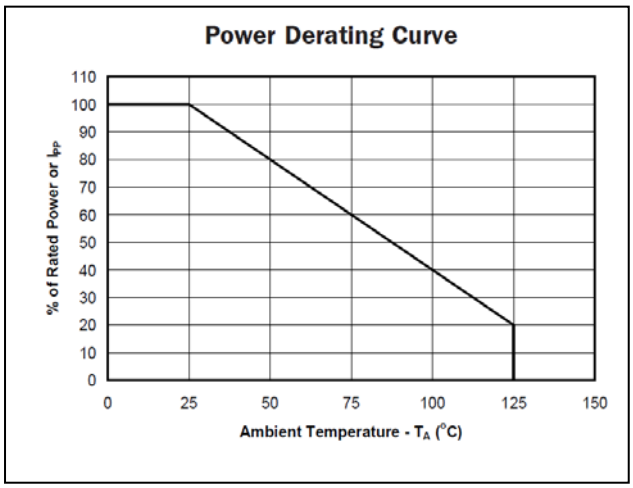

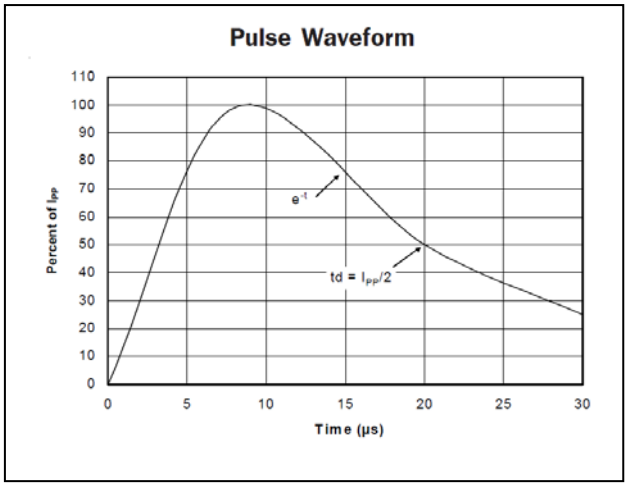

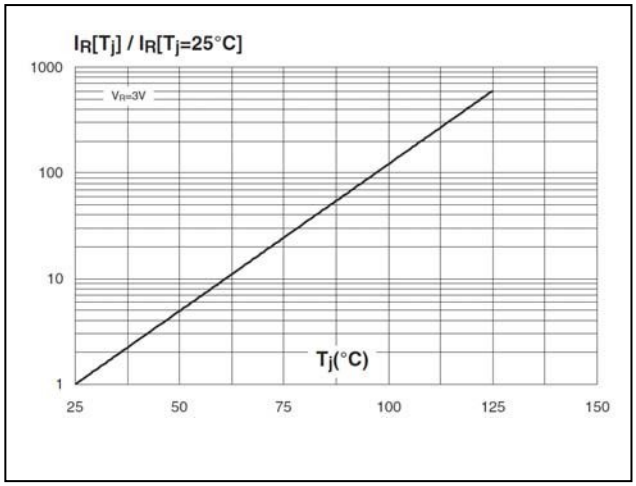

Download from alldatasheet.com

DFN0603 Package Outline Drawing

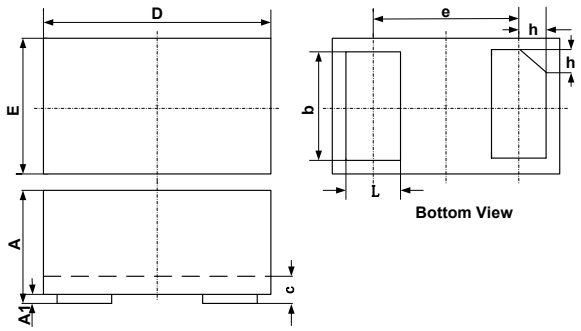

SYM	DIMENSIONS		
	MILLIMETERS		
	MIN	NOM	MAX
A	0.230		0.330
A1	0.000	0.020	0.050
b	0.215	0.245	0.275
c	0.120	0.150	0.180
D	0.550	0.600	0.650
e	0.355 BSC		
E	0.250	0.300	0.350
L	0.160	0.190	0.220
h	0.079 BSC		

Suggested Land Pattern

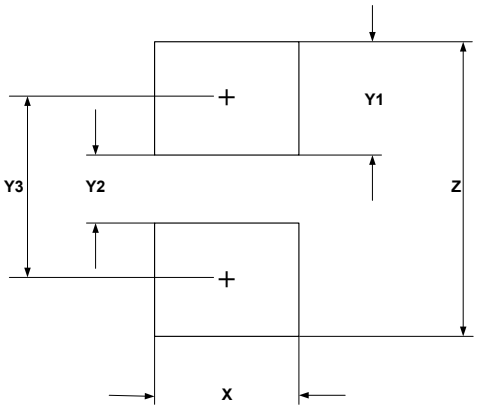

SYM	DIMENSIONS	
	MILLIMETERS	INCHES
X	0.30	0.012
Y1	0.25	0.010
Y2	0.15	0.006
Y3	0.40	0.016
Z	0.65	0.026

Shanghai Leiditech Electronic Co.,Ltd
Email: sale1@leiditech.com
Tel : +86- 021 50828806
Fax : +86- 021 50477059

Download from alldatasheet.com