Leitch Compatible **VCA-7010**

GVG Compatible **VEA-7506**

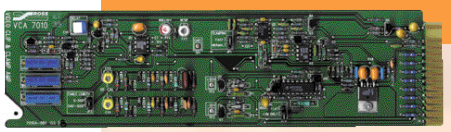

Video Equalizing Amplifier with Clipping and Clamping

For use where clamping and white clipping is required in addition to precision cable equalization.

The basic amplifier equalizes Belden 8281 cable but several versions for other cable types are available at no extra charge.

The back porch clamping speed is adjustable. Fast mode offers excellent hum rejection (>45 dB) while Normal mode provides good hum rejection (>33 dB) with superior immunity to noise.

An adjustable white clipper is included to limit peak white signal excursions and protect the following equipment from overload. Two clipping modes are available. Flat mode causes all frequencies to be clipped equally. Luminance Only mode avoids clipping chroma. The clipper is of an advanced design which maintains excellent signal linearity to within 1.5% of the clipping point.

A differential input provides excellent rejection of input ground loop interference.

Temperature drift effects are almost non-existent due to the use of the latest in analog ASICs combined with meticulous product engineering.

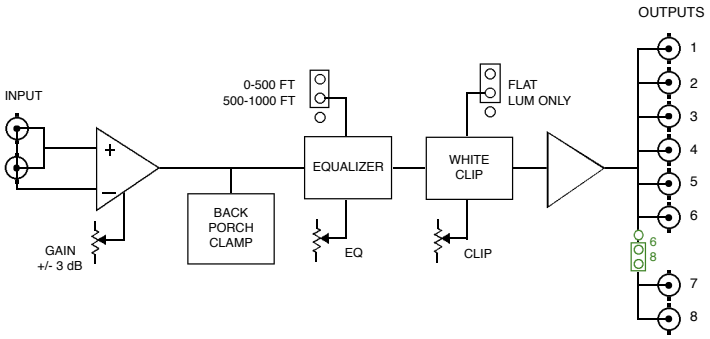

- Precision equalization of up to 305m (1,000 ft.) of coax cable
- 8 outputs (6 output mode selectable on the VEA-7506)
- Versions available for many popular cable types
- White Clipper with hard and soft modes
- Back porch clamping with 2 speeds
- Delay adjustable +/- 2 degrees
- Delay matched for precise interchangeability
- Differential input with excellent common-mode rejection
- Excellent isolation between outputs
- Power to each card is individually fused
- Superb technical specifications
- 5-year transferable warranty
- VCA-7010 is an alternative to the Leitch VDP-683-CLP
- VCA-7010 fits Ross 7000 series and Leitch 680 series frames
- VEA-7506 is an alternative to the GVG 8506
- VEA-7506 fits Ross 7500 series and GVG 8500/8800/8900 series frames

Ross is a trademark of Ross Video Limited. Leitch is a trademark of Leitch Technology Corporation. GVG is a trademark of Thomson Multimedia.