ROITHNER LASERTECHNIK GmbH
WIEDNER HAUPTSTRASSE 76 1040 VIENNA AUSTRIA
TEL. +43 1 586 52 43 -0, FAX. -44 OFFICE@ROITHNER-LASER.COM

v 1.0 15.05.2014

VC850M-TO46GL-3PIN

- Infrared VCSEL
- 850 nm, 2 mW
- Multi Mode
- TO-46 Can, 3 pins
- Glass lens cap, Viewing angle 2°



Description

VC850-H-TO46GL-3PIN is a multi mode infrared VCSEL emitting at typically 850 nm with rated output power of 2 mW cw, mounted into a standard TO-46 package and sealed with a glass lens cap. The VCSEL works under low forward current and voltage.

Maximum Ratings

Parameter	Symbol	Values Min.	Values Max.	Unit
Forward Current	I_F		12	mA
Reverse Voltage (@ 10µA)	V_F		5	V
Operating Temperature	T_{CASE}	0	+ 85	°C
Storage Temperature	T_{STG}	- 40	+ 100	°C
Lead Solder Temperature *	T_{SLD}		+ 260	°C

** must be completed within 10 seconds*

Electro-Optical Characteristics (T_{CASE}=25°C)

Parameter	Symbol	Min.	Values Typ.	Max.	Unit
Emission Wavelength	λ_{Peak}	840	850	860	nm
Spectral Width	$\Delta\lambda$			0.85	nm
Optical Output Power	P_O		2		mW
Beam Divergence	Θ		2		°
Threshold Current	I_{TH}		1.5	3	mA
Operating Current	I_F		6		mA
Operating Voltage	V_F		1.8	2.2	V
Breakdown Voltage	V_B		-10		V
Slope Efficiency	η	0.3	0.4	0.7	mW/mA
Dynamic Resistance	R_D	20	35	55	Ω

Thermal Characteristics

Parameter	Symbol	Min.	Values Typ.	Max.	Test Conditions	Unit
I_{TH} Temperature Variation	ΔI_{TH}		1.0		T_C=0 to 85°C	mA
η Temperature Variation	$\Delta\eta / \Delta T$		-0.5		T_C=0 to 85°C,6mA	%/°C
λ Temperature Variation	$\Delta\lambda / \Delta T$		0.06		T_C=0 to 85°C,6mA	nm/°C

ROITHNER LASERTECHNIK GmbH
WIEDNER HAUPTSTRASSE 76 1040 VIENNA AUSTRIA
TEL. +43 1 586 52 43 -0. FAX. -44 OFFICE@ROITHNER-LASER.COM

Outline Dimensions

TO46GL	TO-46 with glass lens

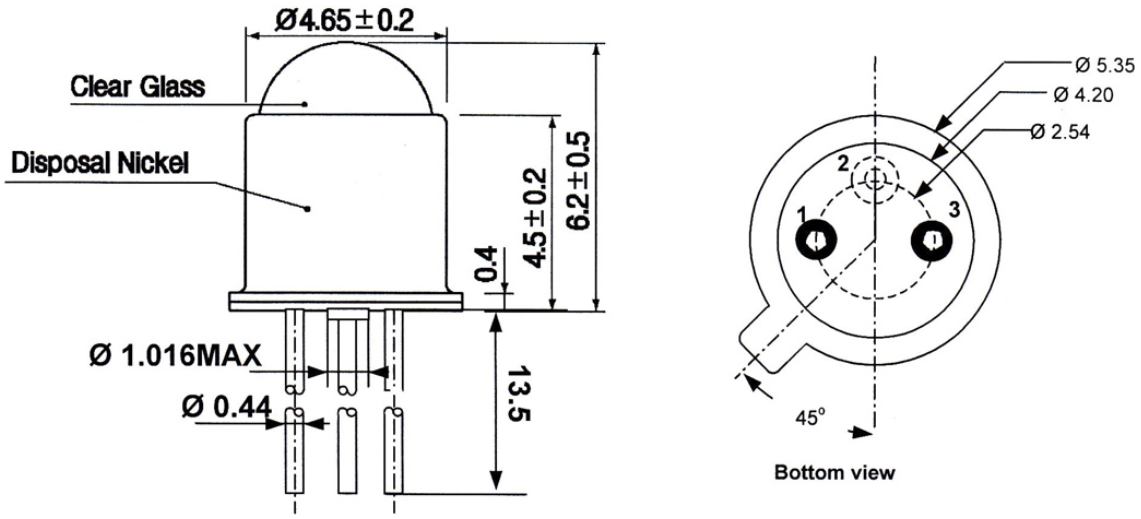

All Dimensions in mm

Electrical Connection

Lead	Description
Pin 1	LD Anode
Pin 2	LD Cathode
Pin 3	n.c.

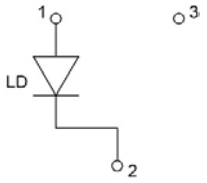

Precautions

Static Electricity:

VCSELs are **sensitive to electrostatic discharge (ESD)**. Precautions against ESD must be taken when handling or operating these VCSELs. Surge voltage or electrostatic discharge can result in complete failure of the device.



Safety Advice:

This VCSEL emits concentrated infrared light which can be **hazardous to the human eye and skin**. This diode is classified as CLASS 3B laser product according to **IEC 60825-1** and **21 CFR Part 1040.10** Safety Standards.

Operation:

Do *only* operate VCSELs with a current source.
Running these LEDs from a voltage source will result in complete failure of the device.
Current of a LED is an exponential function of the voltage across it. Usage of current regulated drive circuits is mandatory.

© All Rights Reserved
The above specifications are for reference purpose only and subjected to change without prior notice