VC-TXO-39SMX SERIES VC-TCXO

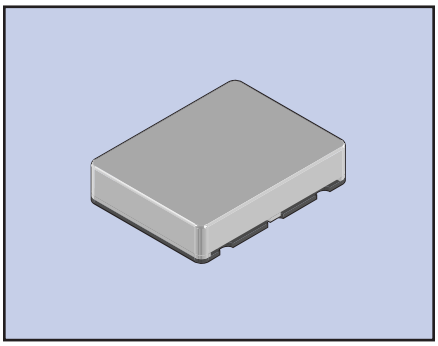

The VC-TXO-39SMX is a VC (Voltage Controlled) TCXO (Temperature Compensated Crystal Oscillator) featuring very tight stability over a wide temperature range. The small SMD ceramic package measures 11.4 x 9.6 x 2.3 mm. The voltage control has a tuning range of ± 12 ppm typical. The low profile package is ideal for wireless communications applications.

FEATURES

- **Highly stable output**
- **RoHS Compliant (PB Free)**
- **Voltage control function**
- **Tape and Reel (500 pcs)**

PART NUMBERING GUIDE

SERIES	FREQUENCY	STABILITY / TEMPERATURE OPTION
VC-TXO-39SMX	– 128	– A

Sample Part Number: VC-TXO-39SMX-128-A, 128=12.8 MHz, A=±1.5 ppm -20 to +75˚C

STANDARD FREQUENCIES

10.000, 13.000, 16.800 AND 19.440 MHz

OPERATING CONDITIONS/ELECTRICAL CHARACTERISTICS

PARAMETERS	CONDITIONS	VC-TXO-39SMX (3V)			UNITS
		MIN	TYP	MAX	
FREQUENCY RANGE		10.000		19.440	MHz
FREQUENCY STABILITY/TEMP	Operating Temperature				
STANDARD	-30 ~ +75˚C			±2.5	PPM
OPTION A	-20 ~ +75˚C			+1.5	PPM
SUPPLY VOLTAGE CHANGE	+3V ±5%			+0.3	PPM
LOAD CHANGE	10k Ω ±10%//10pF ±10%			+0.3	PPM
AGING	First Year @ +25˚C			±1	PPM
STORAGE TEMPERATURE		-40		+85	˚C
SUPPLY VOLTAGE	+3.0 V DC Nominal	+2.85	+3.0	+3.15	V DC
CURRENT CONSUMPTION	10k Ω ±10%//10pF ±10%			1.5	mA
OUTPUT VOLTAGE	Clipped sine wave (DC-Cut)	0.8			Vp-p
OUTPUT LOAD	10k Ω ±10%//10pF ±10%				
FREQUENCY CONTROL RANGE	+1.5 V DC ± 1V Positive Slope	±9	±12		PPM
CONTROL VOLTAGE		+0.5	+1.5	+2.5	V

PACKAGE DIMENSIONS (mm)

PIN CONNECTIONS	
#1	VCONTROL
#2	GND
#3	OUTPUT
#4	Vcc

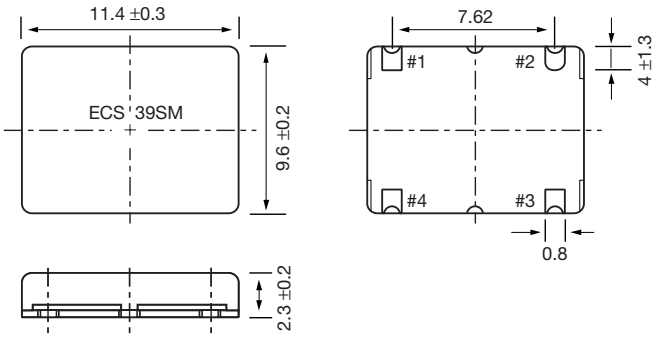

Figure 1) VC-TXO-39SMX Top, Side and Bottom views

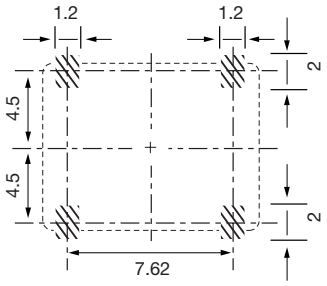

Figure 2) Land Pattern

Mouser Electronics

Authorized Distributor

Click to View Pricing, Inventory, Delivery & Lifecycle Information:

ECS:
VC-TXO-39SM-100