Three Phase Rectifier Bridge

I_{dAV} = 30 A
V_{RRM} = 800-1800 V

V_{RSM} V_{DSM} V	V_{RRM} V_{DRM} V	Type
800	800	VBO 36-08NO8
1200	1200	VBO 36-12NO8
1400	1400	VBO 36-14NO8
1600	1600	VBO 36-16NO8
1800	1800	VBO 36-18NO8

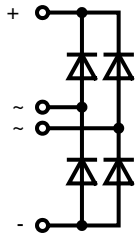

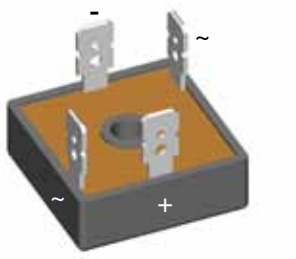

Symbol	Conditions			Maximum Ratings	
I_{dAV}	T_C = 85°C, module			25	A
I_{dAVM}	T_C = 62°C, module			30	A
I_{FSM}	T_{VJ} = 45°C;	t = 10 ms	(50 Hz)	550	A
	V_R = 0	t = 8.3 ms	(60 Hz)	600	A
	$T_{VJ} = T_{VJM}$;	t = 10 ms	(50 Hz)	500	A
	V_R = 0	t = 8.3 ms	(60 Hz)	550	A
I^2t	T_{VJ} = 45°C;	t = 10 ms	(50 Hz)	1520	A^2s
	V_R = 0	t = 8.3 ms	(60 Hz)	1520	A^2s
	$T_{VJ} = T_{VJM}$;	t = 10 ms	(50 Hz)	1250	A^2s
	V_R = 0	t = 8.3 ms	(60 Hz)	1250	A^2s
T_{VJ}				-40...+150	°C
T_{VJM}				150	°C
T_{stg}				-40...+150	°C
V_{ISOL}	50/60 Hz, RMS	t = 1 min		2500	V~
	$I_{ISOL} \leq$ 1 mA	t = 1 s		3000	V~
M_d	Mounting torque	(M5)		2 ±10%	Nm
		(10-32 UNF)		18 ±10%	lb.in.
Weight	Typ.			22	g

Symbol	Conditions		Characteristic Values	
I_R	$V_R = V_{RRM}$	T_{VJ} = 25°C	0.3	mA
		$T_{VJ} = T_{VJM}$	2.0	mA
V_F	I_F = 150 A	T_{VJ} = 25°C	1.7	V
V_{T0}	For power-loss calculations only		0.8	V
r_t			5.8	mΩ
R_{thJC}	per diode; 120° el.		6.20	K/W
	per module		1.55	K/W
R_{thJH}	per diode; 120° el.		7.40	K/W
	per module		1.85	K/W
d_S	Creeping distance on surface		12.7	mm
d_A	Creepage distance in air		9.4	mm
a	Max. allowable acceleration		50	m/s^2

Data according to IEC 60747 and refer to a single diode unless otherwise stated.

Features

- Package with ¼" fast-on terminals
- Isolation voltage 3000 V~
- Planar passivated chips
- Blocking voltage up to 1800 V
- Low forward voltage drop
- UL registered E 72873

Applications

- Supplies for DC power equipment
- Input rectifiers for PWM inverter
- Battery DC power supplies
- Field supply for DC motors

Advantages

- Easy to mount with one screw
- Space and weight savings
- Improved temperature & power cycling

Dimensions in mm (1 mm = 0.0394")

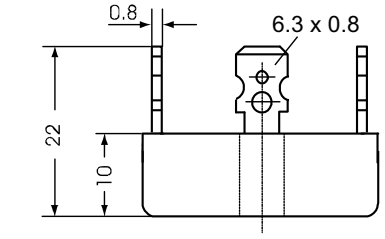

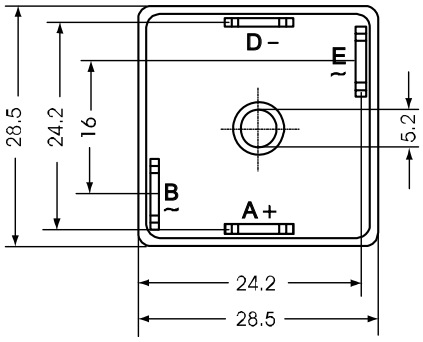

IXYS reserves the right to change limits, test conditions and dimensions.

20100303a

© IXYS All rights reserved

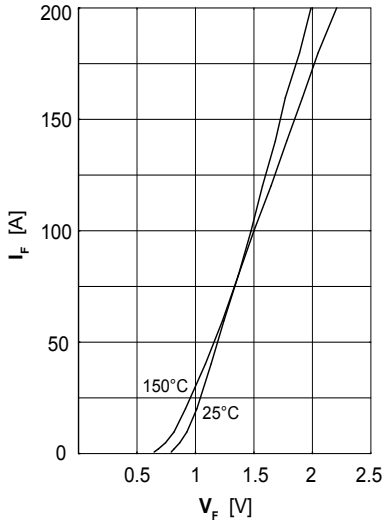

Fig. 1 Forward current versus voltage drop per diode

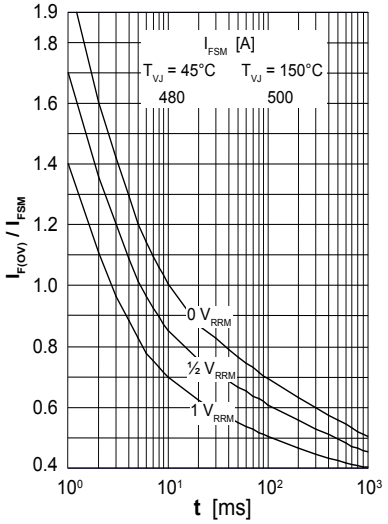

Fig. 2 Surge overload current per diode
I_{FSM}: crest value, t: duration

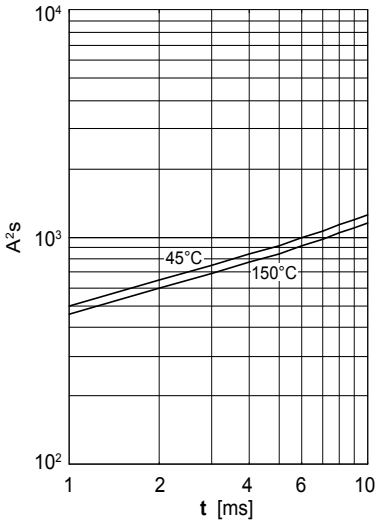

Fig. 3 I^2t versus time (1-10 ms) per diode or thyristor

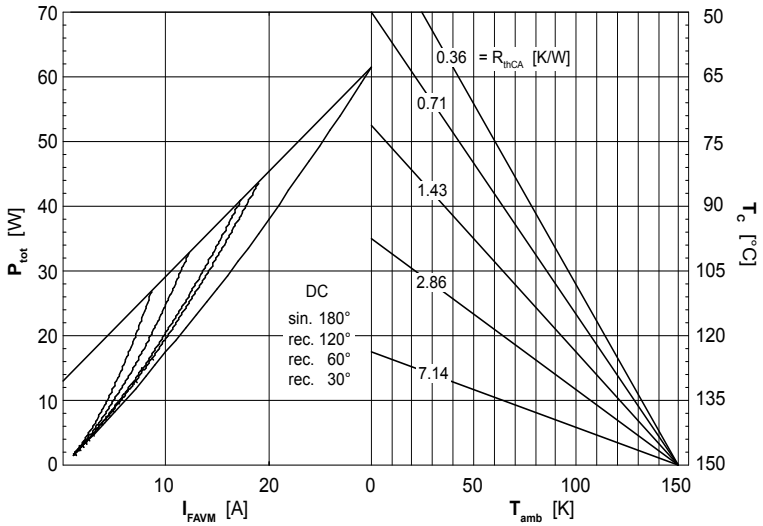

Fig. 4 Power dissipation vs. direct output current and ambient temperature

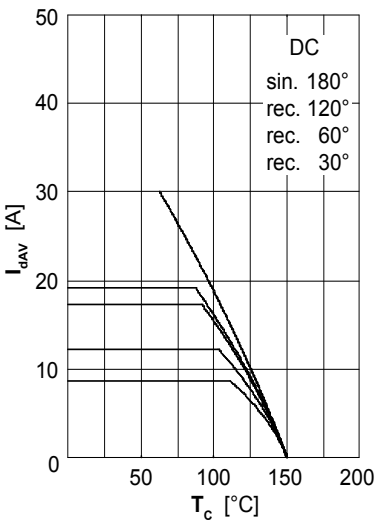

Fig. 5 Maximum forward current at case temperature

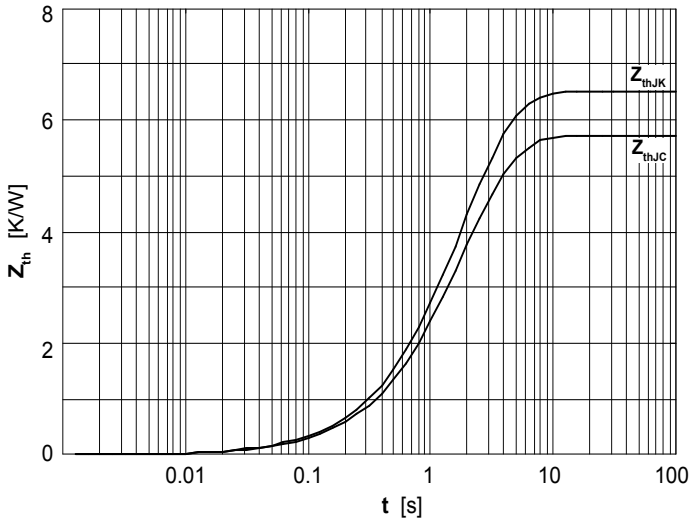

Fig. 6 Transient thermal impedance per diode or thyristor, calculated

IXYS reserves the right to change limits, test conditions and dimensions.

© IXYS All rights reserved