

Model number

VBA-4E-G2-ZA

G2 flat module
4 inputs (PNP)

Features

- AS-Interface certificate
- Degree of protection IP67
- A/B slave with extended addressing possibility for up to 62 slaves
- Addressing jack
- Flat cable connection with cable piercing technique, variable flat cable guide
- Communication monitoring
- Inputs for 2-, 3-, and 4-wire sensors
- Supply for inputs from AS-Interface
- Ground connection (FE) possible
- Function display for bus and inputs
- Detection of overload on sensor supply

Dimensions

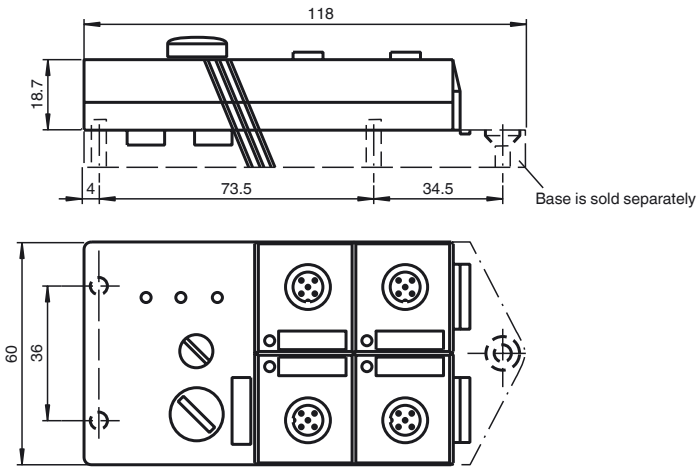

Electrical connection

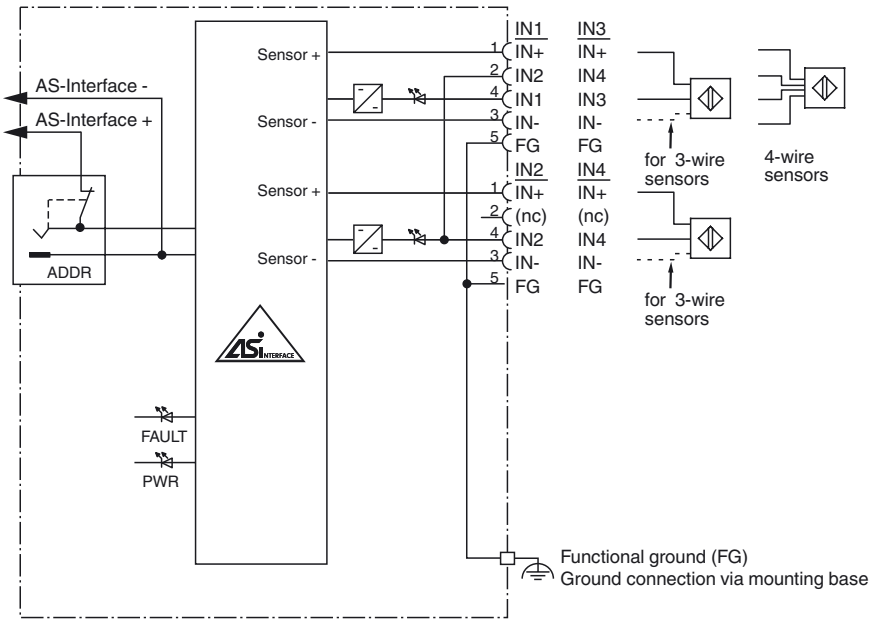

Indicating / Operating means

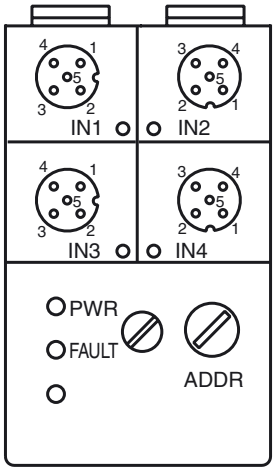

Release date: 2019-01-09 10:19 Date of issue: 2019-01-09 115086_eng.xml

Technical data

General specifications		
Slave type		A/B slave
AS-Interface specification		V2.1
Required master specification		≥ V2.0
UL File Number		E223772
Indicators/operating means		
LED FAULT		error display; LED red red: communication error or address is 0 red flashing: overload of sensor supply
LED PWR		AS-Interface voltage; LED green
LED IN		switching state (input); 4 LED yellow
Electrical specifications		
Rated operating voltage	U_e	26.5 ... 31.6 V from AS-Interface
Rated operating current	I_e	≤ 40 mA (without sensors) / max. 240 mA
Protection class		III
Surge protection		U_e: Over voltage category III, safe isolated power supplies (PELV)
Input		
Number/Type		4 inputs for 2- or 3-wire sensors (PNP), DC option 2 inputs for 4-wire sensors (PNP), DC
Supply		from AS-Interface
Voltage		21 ... 31 V
Current loading capacity		≤ 200 mA (T_B ≤ 40 °C), ≤ 150 mA (T_B ≤ 60 °C), overload-proof and short-circuit protected
Input current		≤ 8 mA (limited internally)
Switching point		according to DIN EN 61131-2 (Type 2)
0 (unattenuated)		≤ 2 mA
1 (attenuated)		≥ 4 mA
Directive conformity		
Electromagnetic compatibility		
Directive 2014/30/EU		EN 62026-2:2013
Standard conformity		
Degree of protection		EN 60529:2000
Input		EN 61131-2:2007
AS-Interface		EN 62026-2:2013
Noise immunity		EN 61000-6-2:2005, EN 61326-1:2006, EN 62026-2:2013
Programming instructions		
Profile		S-0.A.2
IO code		0
ID code		A
ID1 code		7
ID2 code		2
Data bits (function via AS-Interface)		**input** / **output**
D0		IN1 / -
D1		IN2 / -
D2		IN3 / -
D3		IN4 / -
Parameter bits (programmable via AS-i)		**function**
P0		not used
P1		Input filter P1 = 0 input filter on, pulse suppression ≤ 2 ms P1 = 1 input filter off (default settings)
P2		Synchronous mode P2 = 0 synchronous mode on P2 = 1 synchronous mode off (default settings)
P3		not used
Ambient conditions		
Ambient temperature		-25 ... 60 °C (-13 ... 140 °F)
Storage temperature		-25 ... 85 °C (-13 ... 185 °F)
Relative humidity		85 % , noncondensing
Climatic conditions		For indoor use only
Altitude		≤ 2000 m above MSL
Pollution degree		3
Mechanical specifications		
Degree of protection		IP67
Connection		cable piercing method flat cable yellow inputs: M12 round connector
Material		
Housing		PBT
Mass		100 g
Tightening torque, cable gland		0.4 Nm
Mounting		Mounting plate

Function

The VBA-4E-G2-ZA is an AS-Interface interface module with 4 Inputs. Mechanical contacts (e. g. push buttons) as well as 2-, 3- and 4-wire sensors can be connected to the inputs.
The IP67 flat module is ideal for applications in the field. An addressing jack is integrated in the module.
The sensors are connected by means of M12 x 1 screw connections. An LED is provided for each channel to indicate the current switching status. Similarly, an LED is available to monitor the AS-Interface communication and the indication that the module has the address 0.
The mounting plate U-G3FF is used, as standard, for connection to the AS-Interface. This lower section enables the flat cable to be contacted from both sides. If input and output modules are used in a mixed system, the flat cable for the internal power supply can be inserted in the lower section of this module. The module does not access this cable. The advantage is that both flat cables can be laid in parallel, without the danger of the module being destroyed by an incorrect connection.
An overloading of the internal input supply is signalled to the AS-Interface master via the "Peripheral fault" function. Communication via the AS-Interface remains unaffected.

Note:
The mounting base for the module is sold separately.

Accessories

VBP-HH1-V3.0-KIT
AS-Interface Handheld with accessory

VBP-HH1-V3.0
AS-Interface Handheld

VAZ-PK-1,5M-V1-G
Adapter cable module/hand-held programming device

VAZ-FK-ED-G2
AS-Interface end seal for G2 modules

Matching system components

U-G3FF
AS-Interface module mounting base for connection to flat cable (AS-Interface and external auxiliary power)

Release date: 2019-01-09 10:19 Date of issue: 2019-01-09 115086_eng.xml

Refer to “General Notes Relating to Pepperl+Fuchs Product Information”.
Pepperl+Fuchs Group www.pepperl-fuchs.com
USA: +1 330 486 0001 fa-info@us.pepperl-fuchs.com
Germany: +49 621 776 4411 fa-info@de.pepperl-fuchs.com
Singapore: +65 6779 9091 fa-info@sg.pepperl-fuchs.com
PEPPERL+FUCHS SENSING YOUR NEEDS

Notes

For 4-wire sensors, it is only possible to use plug-in slot IN1 or IN3 for inputs 1+2 or 3+4 (jumpered internally).

Do not connect inputs and outputs, which are supplied via the module from AS-interface or via auxiliary power, with power supply and signal circuits with external potentials.

Release date: 2019-01-09 10:19 Date of issue: 2019-01-09 115086_eng.xml