

Model number

VBA-4E-G12-ZAL

G12 flat module
4 inputs (PNP)

Features

- A/B slave with extended addressing possibility for up to 62 slaves
- One-piece housing with stainless steel base
- Installation without tools
- Metal threaded inserts with SPEED-CON technology
- Flat cable connection with cable piercing technique, variable flat cable guide
- Inputs for 2-, 3-, and 4-wire sensors
- Communication monitoring
- DIN rail mounting
- AS-Interface certificate

Dimensions

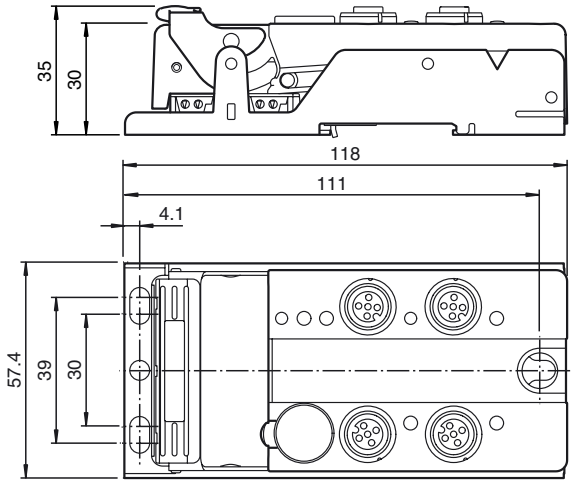

Electrical connection

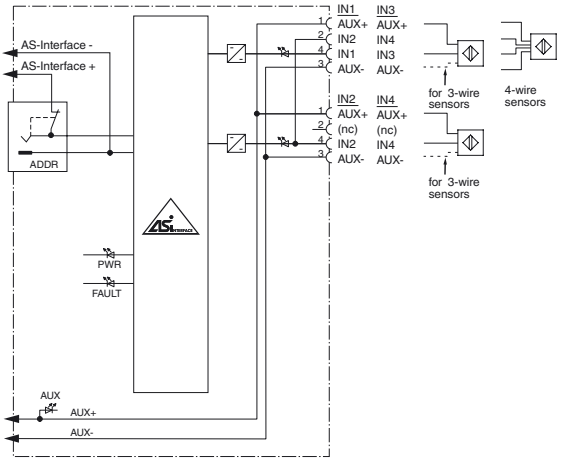

Indicating / Operating means

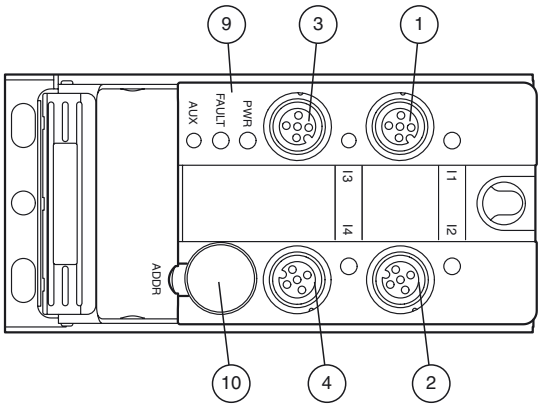

(1) .. (4) Input 1 to 4

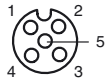

(9) Status indication

(10) Addressing socket

Technical data

General specifications	
Slave type	A/B slave
AS-Interface specification	V3.0
Required master specification	≥ V2.1
UL File Number	E223772
Functional safety related parameters	
$MTTF_d$	330 a
Mission Time (T_M)	20 a

Release date: 2019-01-09 10:24 Date of issue: 2019-01-09 200505_eng.xml

Diagnostic Coverage (DC)		0 %
Indicators/operating means		
LED FAULT		error display; LED red red: communication error or address is 0 red flashing: overload of sensor supply
LED PWR		AS-Interface voltage; green LED green: voltage OK flashing green: address 0
LED AUX		ext. auxiliary voltage U_{AUX}; dual LED green/red green: voltage OK red: reverse voltage
LED IN		switching state (input); 4 LED yellow
Electrical specifications		
Auxiliary voltage	U_{AUX}	24 V DC ± 15 % PELV
Rated operating voltage	U_e	26.5 ... 31.6 V from AS-Interface
Rated operating current	I_e	≤ 40 mA
Protection class		III
Surge protection		U_{AUX}, U_{in}: Over voltage category III, safe isolated power supplies (PELV) derived from mains up to 300 V AC line-to-neutral
Input		
Number/Type		4 inputs for 2- or 3-wire sensors (PNP), DC option 2 inputs for 4-wire sensors (PNP), DC
Supply		from external auxiliary voltage U_{AUX}
Current loading capacity		≤ 600 mA overload and short-circuit resistant
Input current		≤ 8 mA (limited internally)
Switching point		according to DIN EN 61131-2 (Type 2)
0 (unattenuated)		≤ 2 mA
1 (attenuated)		≥ 6 mA
Signal delay		< 1 ms (input/AS-Interface)
Directive conformity		
Electromagnetic compatibility		
Directive 2014/30/EU		EN 62026-2:2013
Standard conformity		
Degree of protection		EN 60529:2000
Fieldbus standard		EN 62026-2:2013
Input		EN 61131-2
Emitted interference		EN 61000-6-4:2007
AS-Interface		EN 62026-2:2013
Noise immunity		EN 61000-6-2:2005 EN 62026-2:2013
Programming instructions		
Profile		S-0.A.2
IO code		0
ID code		A
ID1 code		7
ID2 code		2
Data bits (function via AS-Interface)		**input** / **output**
D0		IN1 / -
D1		IN2 / -
D2		IN3 / -
D3		IN4 / -
Parameter bits (programmable via AS-i)		**function**
P0		not used
P1		Input filter P1 = 0 input filter on, pulse suppression ≤ 2 ms P1 = 1 input filter off (default settings)
P2		Synchronous mode P2 = 0 synchronous mode on P2 = 1 synchronous mode off (default settings)
P3		not used
Ambient conditions		
Ambient temperature		-25 ... 70 °C (-13 ... 158 °F)
Storage temperature		-25 ... 85 °C (-13 ... 185 °F)
Relative humidity		85 % , noncondensing
Climatic conditions		For indoor use only
Altitude		≤ 2000 m above MSL
Shock and impact resistance		30 *g*, 11 ms in 6 spatial directions 3 shocks 10 *g*, 16 ms in 6 spatial directions 1000 shocks
Vibration resistance		0.75 mm 10 ... 57 Hz , 5 g 57 ... 150 Hz, 20 cycles
Pollution degree		3
Mechanical specifications		
Degree of protection		IP67
Connection		cable piercing method flat cable yellow inputs: M12 round connector
Material		
Housing		PBT
Mass		200 g
Tightening torque, cable gland		0.4 Nm

Function

The VBA-4E-G12-ZAJ is an AS-Interface trigger module with 4 inputs. 2- and 3-wire sensors as well as mechanical contacts can be connected to the plus switching electronic inputs.
The solid housing permits fast mounting without tools as well as easy removal without tools. The stainless steel shell and the cast housing ensure durability and a high protection category.
The connection to the AS-Interface cable is achieved via penetration technology in the integrated flat cable. The insert for the flat cables can be turned in two orientations.
All connections to inputs are implemented via metal inserts for high stability. The connection to the sensors is achieved via a M12 x 1 circular connector with SPEEDCON quick locking option.
The inputs and the connected sensors are supplied via an external power source (AUX).
To indicate the current switching state there is an LED for each channel fitted to the top of the module.
An LED to indicate the AS-Interface voltage and that the module has an address of 0 is available, another indicates errors in the AS-Interface communication as well as periphery faults.
This module can be mounted in any position using three screws or can be snapped onto the DIN rail using the stainless steel holder.

Accessories

VBP-HH1-V3.0-KIT
AS-Interface Handheld with accessory

VAZ-V1-B3
Blind plug for M12 sockets

VBP-HH1-V3.0
AS-Interface Handheld

VAZ-PK-1,5M-V1-G
Adapter cable module/hand-held programming device

VAZ-CLIP-G12
lock for G12 module

Release date: 2019-01-09 10:24 Date of issue: 2019-01-09 200505_eng.xml

Refer to “General Notes Relating to Pepperl+Fuchs Product Information”.
Pepperl+Fuchs Group www.pepperl-fuchs.com
USA: +1 330 486 0001 fa-info@us.pepperl-fuchs.com
Germany: +49 621 776 4411 fa-info@de.pepperl-fuchs.com
Singapore: +65 6779 9091 fa-info@sg.pepperl-fuchs.com
PEPPERL+FUCHS SENSING YOUR NEEDS

Mounting	Mounting plate

Notes

For 4-wire sensors, it is only possible to use plug-in slot IN1 or IN3 for inputs 1+2 or 3+4 (jumpered internally).

Do not connect inputs and outputs, which are supplied via the module from AS-interface or via auxiliary power, with power supply and signal circuits with external potentials.

Release date: 2019-01-09 10:24 Date of issue: 2019-01-09 200505_eng.xml