

Model number

VBA-2E-G4-I

G4 module IP65
2 analog inputs (current)

Features

- Degree of protection IP65
- Flat or round cable connection (via standardized EEMS base, not included with delivery)
- Cable piercing method for flat cable
- Function display for bus, external auxiliary voltage and inputs
- Supply of inputs external or from the module, as required

Dimensions

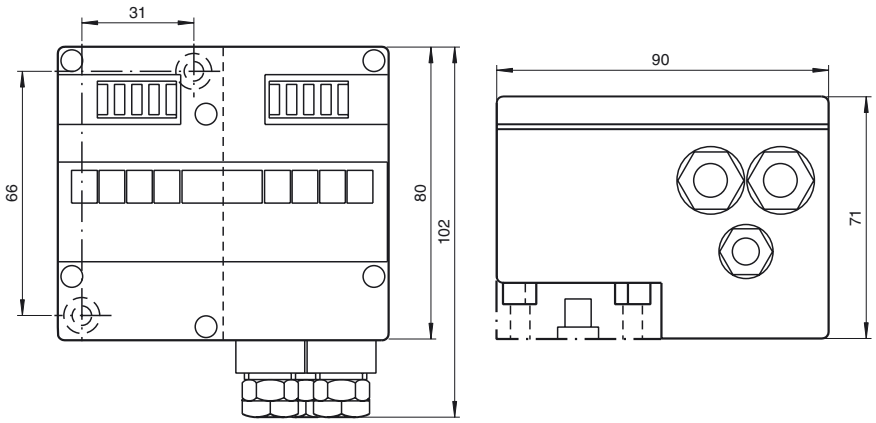

Electrical connection

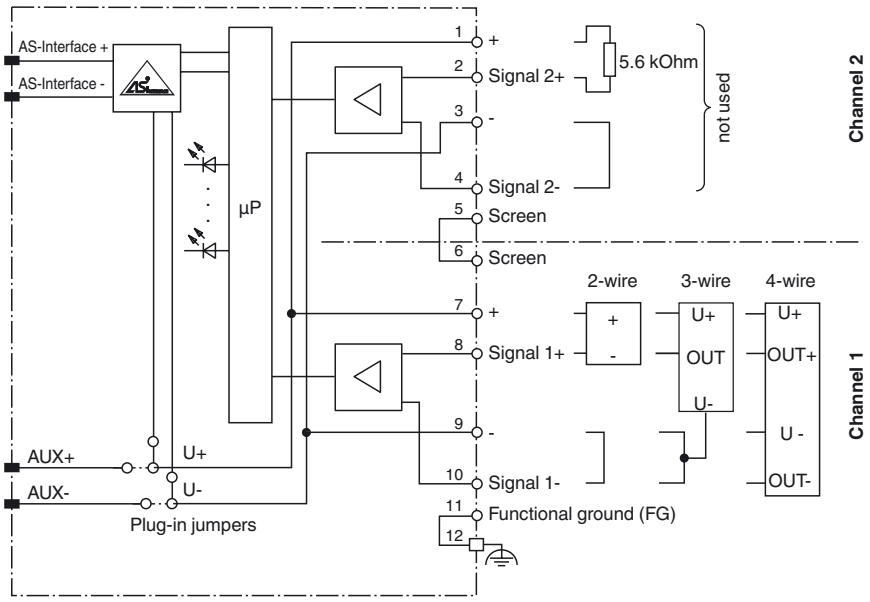

Indicating / Operating means

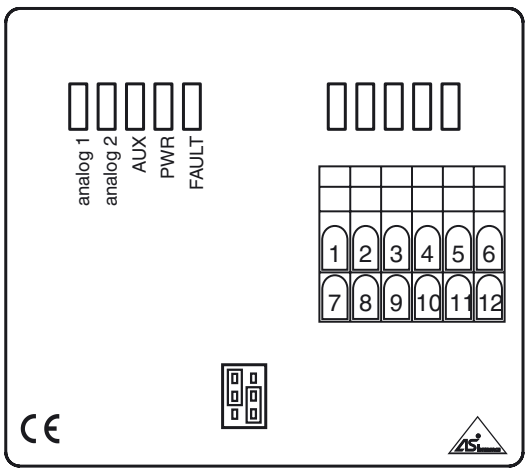

Spring terminal block:

1:	24V ext.	7:	24V ext.
2:	Sig.+ Ch. 2	2:	Sig.+ Ch. 1
3:	0 V ext.	9:	0 V ext.
4:	N.C.	10:	N.C.
5:	Shield	11:	FG
6:	Shield	12:	FG

Plug-in jumper:

Power supply of outputs from the external auxiliary power

Power supply of outputs from the module (AS-Interface)

Release date: 2019-08-23 12:07 Date of issue: 2019-08-23 112311_eng.xml

Technical data

General specifications		
Slave type		Standard slave
AS-Interface specification		V2.1
Required master specification		≥ V2.1
UL File Number		E223772
Functional safety related parameters		
$MTTF_d$		160 a at 30 °C
Indicators/operating means		
LED FAULT		error display; LED red red: communication error red flashing: peripheral error
LED PWR		AS-Interface voltage; LED green
LED ANALOG		status input signal; LED green off: 1 < 1 mA (peripheral error) green: 1 mA ≤ I ≤ 1 23 mA green flashing: I > 23 mA (peripheral error)
LED AUX		ext. auxiliary voltage U_{AUX} ; LED green
Electrical specifications		
Auxiliary voltage (output)	U_{AUX}	24 V DC ± 15 % PELV
Rated operating voltage	U_e	26.5 ... 31.6 V from AS-Interface
Rated operating current	I_e	≤ 80 mA
Protection class		III
Input		
Number/Type		2 analog inputs (currrent), 4 ... 20 mA
Supply		from AS-Interface or from external auxiliary voltage as required U_{AUX}
Current loading capacity		≤ 200 mA from AS-Interface ≤ 500 mA from external auxiliary voltage U_{AUX}
Input resistance		50 Ω
Resolution		16 Bit / 1 µA
Directive conformity		
Electromagnetic compatibility		
Directive 2014/30/EU		EN 62026-2:2013
Standard conformity		
Degree of protection		EN 60529:2000
AS-Interface		EN 62026-2:2013
Programming instructions		
Profile		S-7.3.D
IO code		7
ID code		3
ID2 code		D
Data bits (function via AS-Interface)		The transfer of the data value is based on AS-Interface Profile 7.3.
Parameter bits (programmable via AS-i)		**function**
P0		mains power frequency filter P0=1, 50 Hz filter active P0=0, 60 Hz filter active
P1		projecting of the 2nd channel P1=1, channel 2 is projected P1=0, channel 2 is not projected
P2		Message of peripheral error P2=1, peripheral error is reported P2=0, peripheral error is not reported
P3		not used
Ambient conditions		
Ambient temperature		0 ... 70 °C (32 ... 158 °F)
Storage temperature		-25 ... 85 °C (-13 ... 185 °F)
Mechanical specifications		
Degree of protection		IP65
Connection		cable piercing method or terminal compartment yellow flat cable/black flat cable or standard round cable inputs/outputs: 2 x M16 x 1.5 cable glands and cage tension spring terminals, 1 x M12 x 1.5 cable gland (not used)
Material		
Housing		PA 6 GF30
Mass		350 g
Mounting		DIN mounting rail

Notes

Do not connect inputs and outputs, which are supplied via the module from AS-interface or via auxiliary power, with power supply and signal circuits with external potentials.

Function

The VBA-2E-G4-I analogue module has two analogue current inputs 4 mA ... 20 mA. The asynchronous transformation of measured values and the data transfer is accomplished in accordance with AS-Interface profile 7.3. The measured-value transmitter can be supplied from the AS-Interface or from the external auxiliary power via the black flat cable, depending on the wiring of the plug-in jumpers. The resolution of the analogue values is 16 bit. System disturbances are eliminated, using a programmable filter (50 Hz/60 Hz).
The IP65 rated G4 module is especially suitable for rough conditions. Connection to the measured-value transmitters is established by means of cable glands and cage tension spring terminals thus making the installation especially user-friendly. For pre-addressing the module it can be plugged directly onto the adapter of the hand-held programming device VBP-HH1.
Both flat and round cables can be used for the connection of the AS-Interface transmission line and the external 24 V DC power supply. Use the U-G1FF base for the AS-Interface flat cable. The AS-Interface standardised EEMS interface, uses the cable piercing method to connect both the yellow and black flat cables.
Use the U-G1PP base for a round cable. The AS-Interface cable as well as the external power supply may be connected within the U-G1PP base.

Accessories

VBP-HH1-V3.0-KIT
AS-Interface Handheld with accessory

VBP-HH1-V3.0
AS-Interface Handheld

VAZ-G4-B
Blind plug PG7

VAZ-G4-B1
Blind plug M12

Matching system components

U-G1FF
AS-Interface module mounting base for connection to flat cable (AS-Interface and external auxiliary power)

U-G1FFA
AS-Interface module mounting base with adressing jack for connection to flat cable (AS-Interface and external auxiliary power)

U-G1PP
AS-Interface module mounting base for connection to round cable (AS-Interface and external auxiliary power)

Release date: 2019-08-23 12:07 Date of issue: 2019-08-23 112311_eng.xml

Refer to “General Notes Relating to Pepperl+Fuchs Product Information”.
Pepperl+Fuchs Group www.pepperl-fuchs.com
USA: +1 330 486 0001 fa-info@us.pepperl-fuchs.com
Germany: +49 621 776 4411 fa-info@de.pepperl-fuchs.com
Singapore: +65 6779 9091 fa-info@sg.pepperl-fuchs.com
PEPPERL+FUCHS SENSING YOUR NEEDS