PLCC2 SMD TYPE LED

VAOL-S2RP4

Features

- Fit automatic placement equipment.
- Fit Compatible with vapor-phase reflow, Infrared reflow and wave solder processes.
- White package.
- Pb-free.
- RoHS compliant.

Descriptions

- For higher packing density .
- For minature applications .
- Water clear lens .
- Chip material : AlGaInP .
- Emitting color : Red .

Package Outline Dimensions

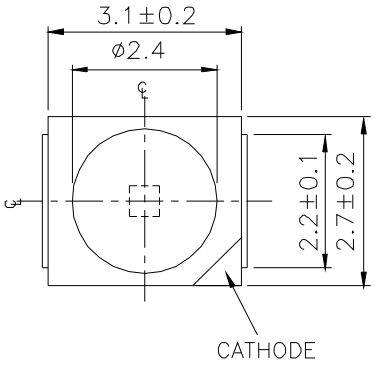

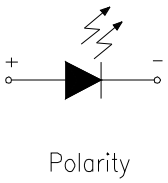

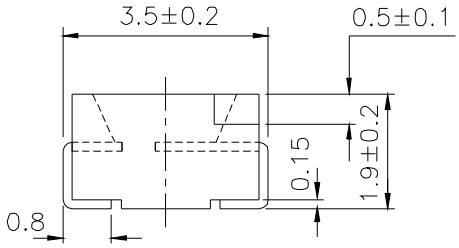

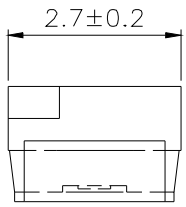

For reflow soldering (Proposal)

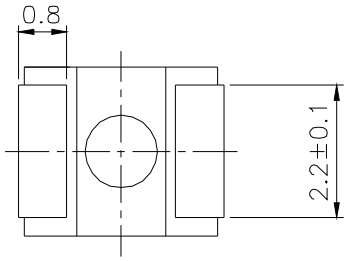

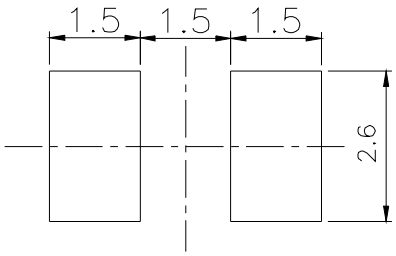

Note: The tolerances unless mentioned is ±0.1mm ,Unit = mm

Absolute Maximum Ratings (Ta=25℃)

Parameter	Symbol	Rating	Units
Reverse Voltage	V_R	5	V
Forward Current	I_F	50	mA
Operating Temperature	Topr	-40 ~ +85	℃
Storage Temperature	Tstg	-40 ~ +100	℃
Electrostatic Discharge(HBM)	ESD	2000	V
Power Dissipation	Pd	120	mW
Peak Forward Current (Duty 1/10 @1KHz)	I_{FP}	100	mA
Soldering Temperature	Tsol	Reflow Soldering : 260 ℃ for 10 sec. Hand Soldering : 350 ℃ for 3 sec.	

Electro-Optical Characteristics (Ta=25℃)

Parameter	Symbol	Min.	Typ.	Max.	Unit	Condition
Luminous intensity	IV	360	-----	900	mcd	IF=20mA
Viewing Angle	2θ1/2	-----	120	-----	deg	IF=20mA
Peak Wavelength	λp	-----	624	-----	nm	IF=20mA
Dominant Wavelength	λd	621	-----	631	nm	IF=20mA
Spectrum Radiation Bandwidth	△λ	-----	20	-----	nm	IF=20mA
Forward Voltage	VF	1.75	-----	2.35	V	IF=20mA
Reverse Current	IR	-----	-----	10	μA	VR=5V

Notes:

1.Tolerance of Luminous Intensity ±10%

2.Tolerance of Dominant Wavelength ± 1nm

3.Tolerance of Forward Voltage ±0.1V

Bin Range Of Dominant Wavelength

Group	Bin Code	Min.	Max.	Unit	Condition
F	FF1	621	626	nm	IF=20mA
	FF2	626	631		

Bin Rang Of Luminous Intensity

Bin	Min	Max	Unit	Condition
T2	360	450	mcd	IF=20mA
U1	450	565		
U2	565	715		
V1	715	900		

Bin Rang Of Forward Voltage

Group	Bin	Min	Max	Unit	Condition
B	0	1.75	1.95	V	IF=20mA
	1	1.95	2.15		
	2	2.15	2.35		

Notes:

1.Tolerance of Luminous Intensity ±10%

2.Tolerance of Dominant Wavelength ± 1nm

3.Tolerance of Forward Voltage ±0.1V

Typical Electro-Optical Characteristics Curves

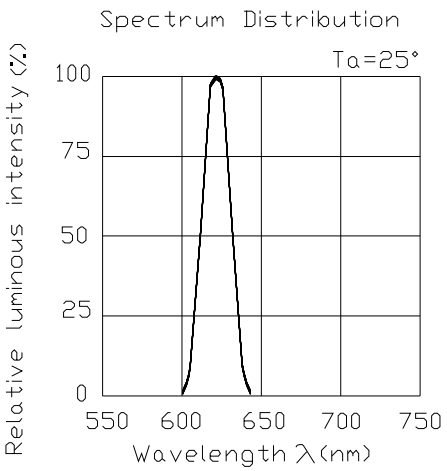

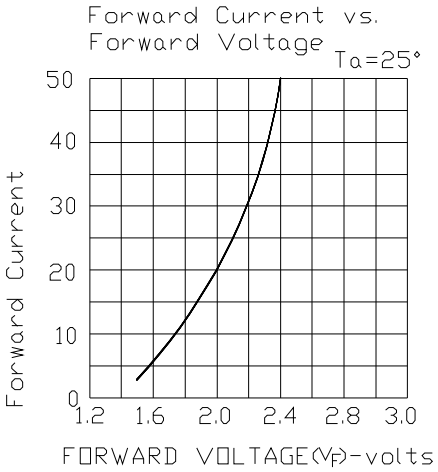

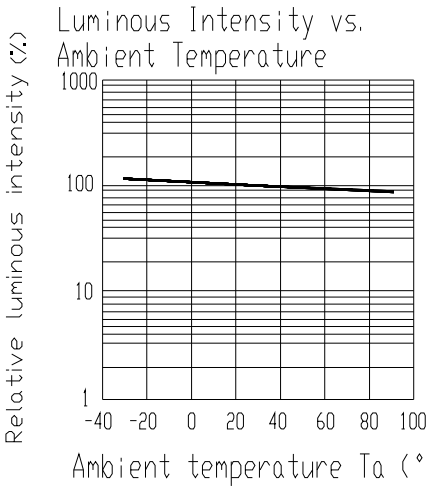

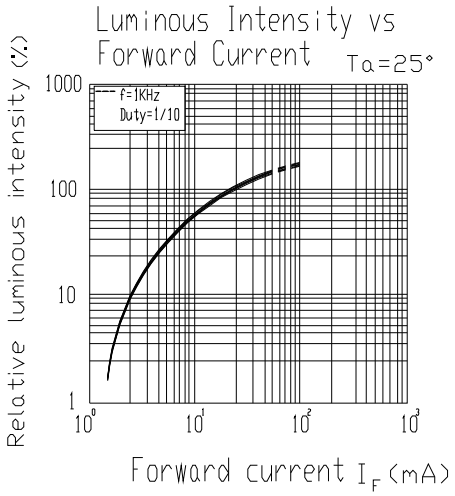

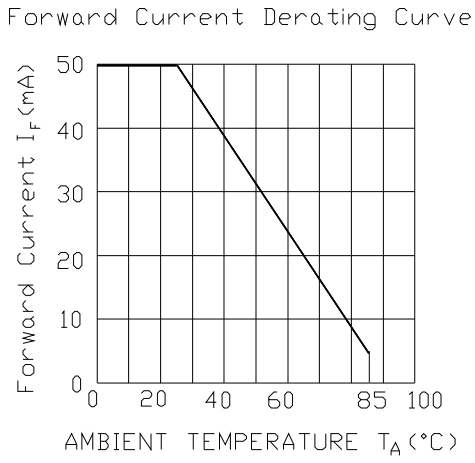

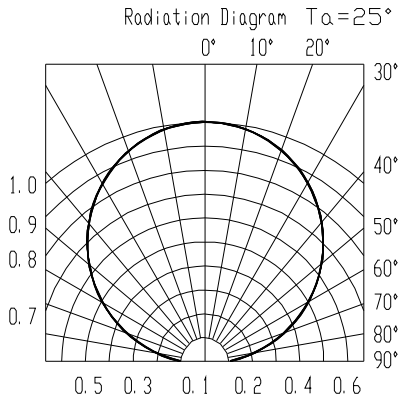

Reel Dimensions

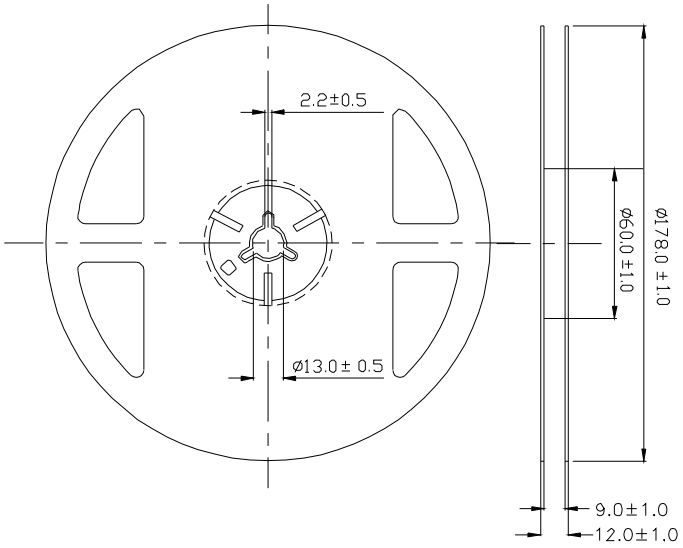

Note: The tolerances unless mentioned is ±0.1mm ,Unit = mm

Carrier Tape Dimensions: Loaded quantity 2000 PCS per reel.

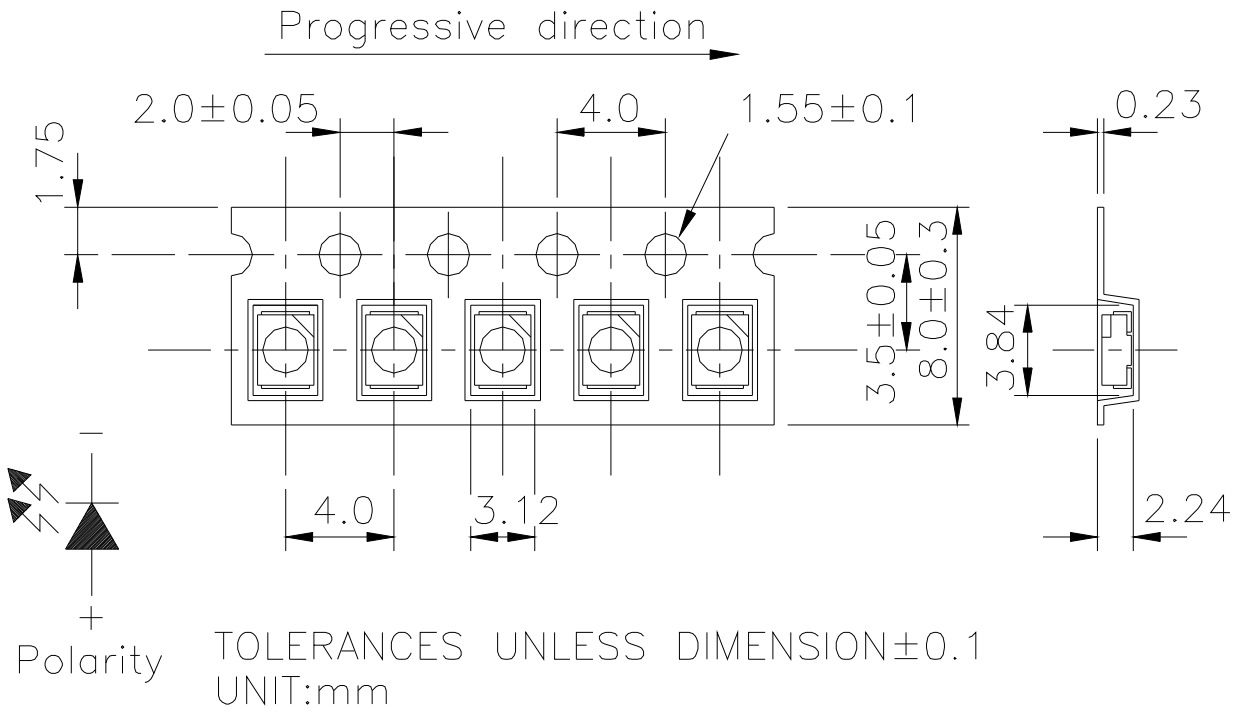

Note: The tolerances unless mentioned is ±0.1mm Unit = mm

Moisture Resistant Packaging

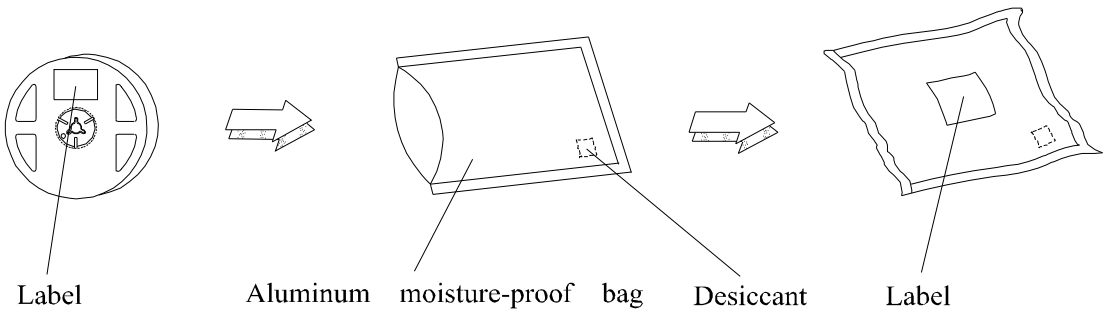

Soldering Condition

1.Pb-free solder temperature profile

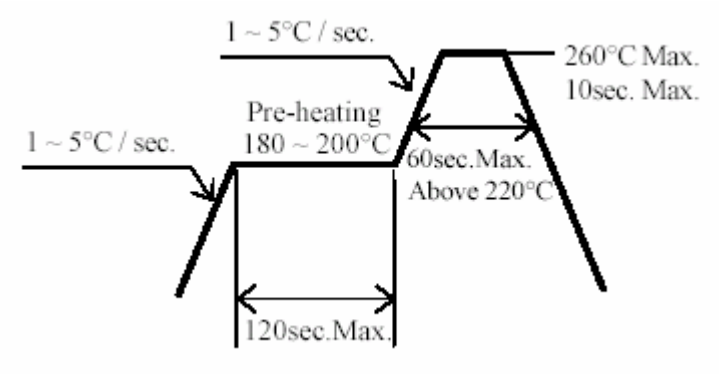

2.Reflow soldering should not be done more than two times.

3 When soldering, do not put stress on the LEDs during heating.

4 After soldering, do not warp the circuit board.

Soldering Iron

Each terminal is to go to the tip of soldering iron temperature less than 350℃ for 3 seconds within once in less than the soldering iron capacity 25W. Leave two seconds and more intervals, and do soldering of each terminal. Be careful because the damage of the product is often started at the time of the hand solder.