1206 SMD TYPE LED

VAOL-S12WR4

Features

- Fit automatic placement equipment.
- Fit Compatible with infrared and vapor phase reflow solder process.
- Pb-free.
- RoHS compliant.

Descriptions

- For higher packing density .
- For minature applications .
- Yellow Diffusion Lens .
- Chip material : InGaN .
- Emitting color : White .

Package Outline Dimensions

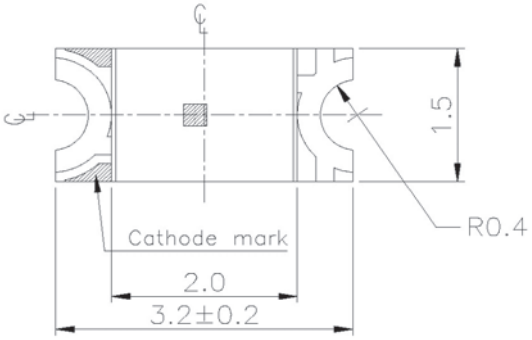



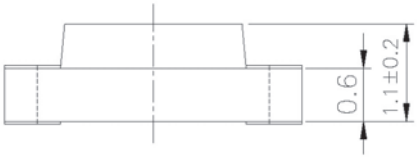

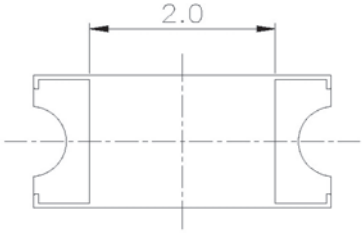

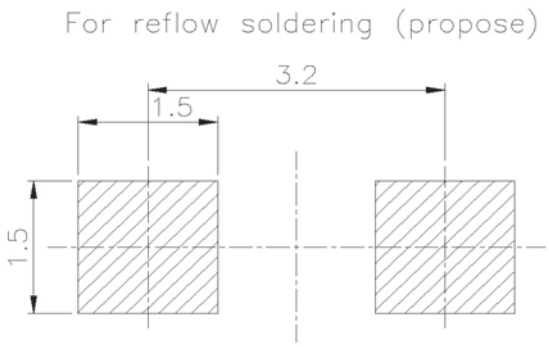

Note: The tolerances unless mentioned is ±0.1mm ,Unit = mm

Absolute Maximum Ratings (Ta=25℃)

Parameter	Symbol	Rating	Unit
Reverse Voltage	V_R	5	V
Forward Current	I_F	25	mA
Operating Temperature	Topr	-40 ~ +85	℃
Storage Temperature	Tstg	-40 ~ +90	℃
Electrostatic Discharge(HBM)	ESD	150	V
Power Dissipation	Pd	110	mW
Peak Forward Current (Duty 1/10 @1KHz)	I_{FP}	100	mA
Soldering Temperature	Tsol	Reflow Soldering : 260 ℃ for 10 sec. Hand Soldering : 350 ℃ for 3 sec.	

Electro-Optical Characteristics (Ta=25℃)

Parameter	Symbol	Min.	Typ.	Max.	Unit	Condition
Luminous Intensity	Iv	45	72	112	mcd	I_F=5mA
Viewing Angle	2θ 1/2	-----	140	-----	deg	
Forward Voltage	V_F	2.70	2.90	3.15	V	
Reverse Current	I_R	-----	-----	50	μA	V_R=5V

Bin Range Of Luminous Intensity & Forward Voltage

Symbol	Bin Code	Min.	Max.	Unit	Condition
Iv	P	45.0	72.0	mcd	I_F=5mA
	Q	72.0	112		
V_F	15	2.70	2.85	V	
	16	2.85	3.00		
	17	3.00	3.15		

Notes:

1.Tolerance of Luminous Intensity ±10%

2.Tolerance of Forward Voltage ±0.1V

Chromaticity Coordinates Specifications for Bin Grading

I_F= 5mA

Groups	Bin Code	CIE_x	CIE_y
A	1	0.274	0.226
		0.274	0.258
		0.294	0.286
		0.294	0.254
	2	0.274	0.258
		0.274	0.291
		0.294	0.319
		0.294	0.286
	3	0.294	0.254
		0.294	0.286
		0.314	0.315
		0.314	0.282
	4	0.294	0.286
		0.294	0.319
		0.314	0.347
		0.314	0.315
	5	0.314	0.282
		0.314	0.315
		0.334	0.343
		0.334	0.311
	6	0.314	0.315
		0.314	0.347
		0.334	0.376
		0.334	0.343

Notes:

1.The C.I.E. 1931 chromaticity diagram (Tolerance ±0.01).

2.The products are sensitive to static electricity and care must be fully taken when handling products.

CIE Chromaticity Diagram

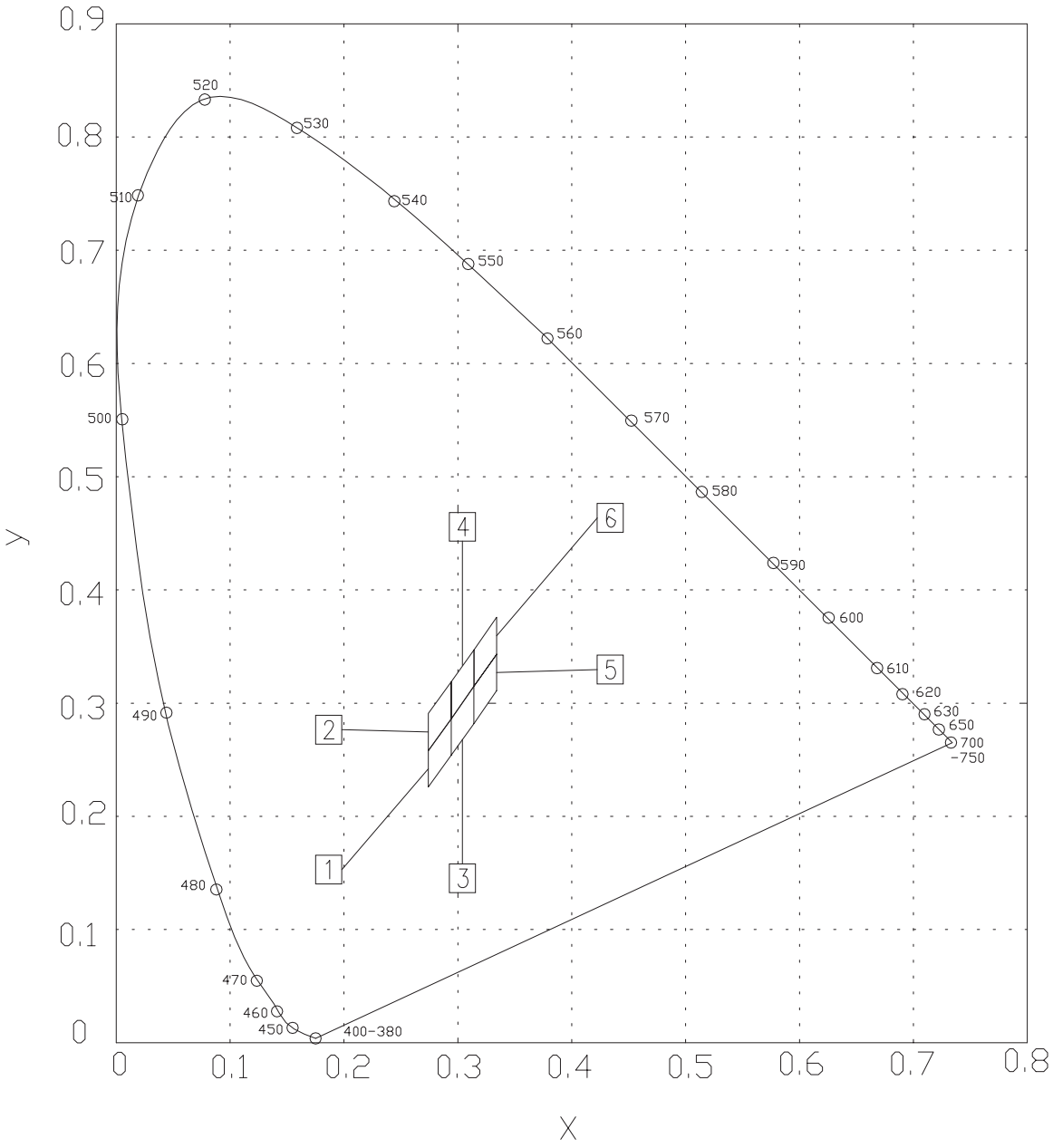

Typical Electro-Optical Characteristics Curves

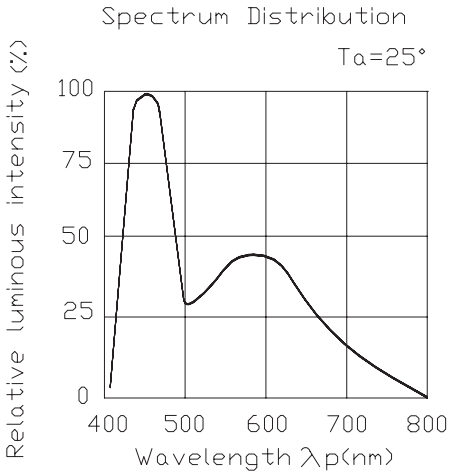

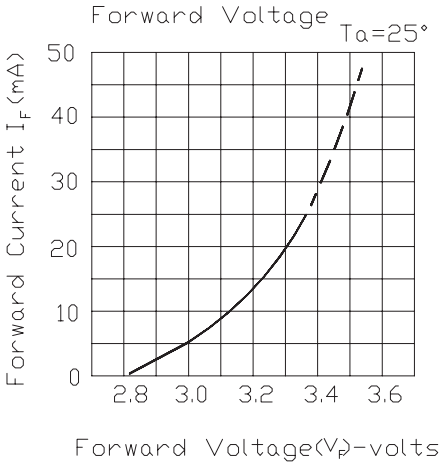

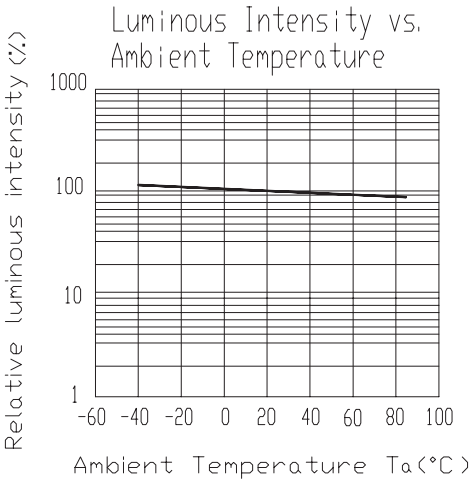

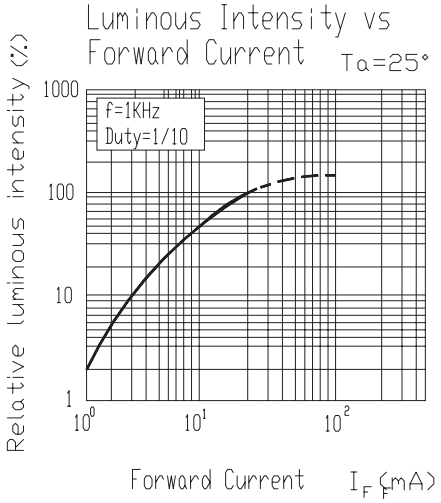

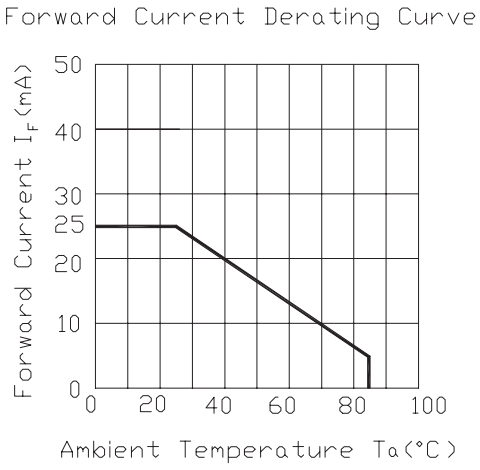

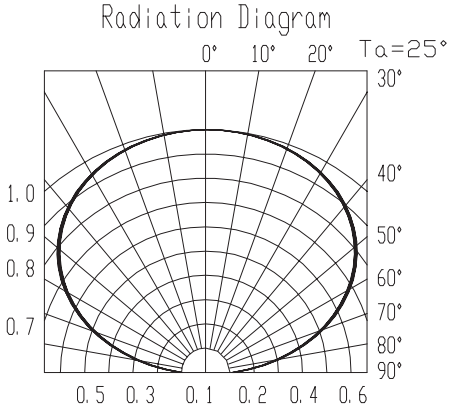

Reel Dimensions

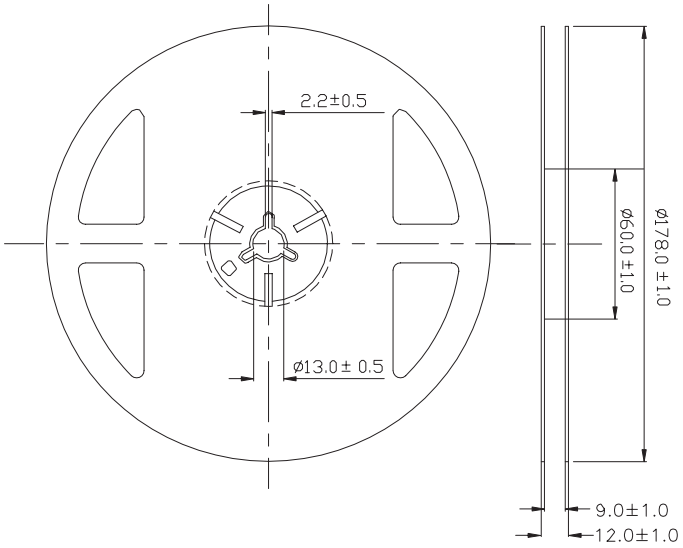

Note: The tolerances unless mentioned is ±0.1mm ,Unit = mm

Carrier Tape Dimensions: Loaded quantity 2000 PCS per reel

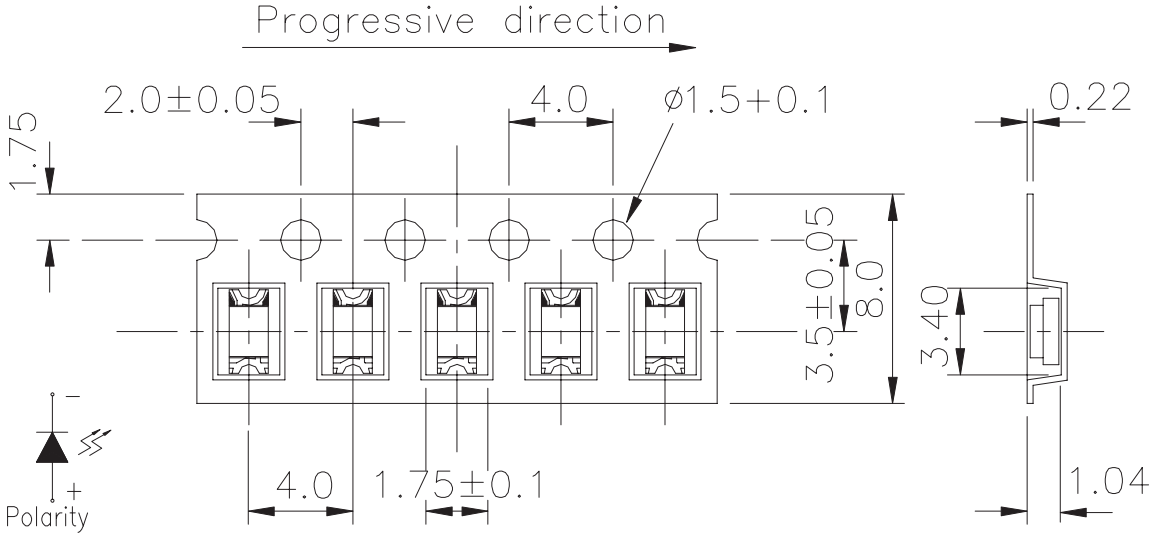

Note: The tolerances unless mentioned is ±0.1mm ,Unit = mm

Moisture Resistant Packaging

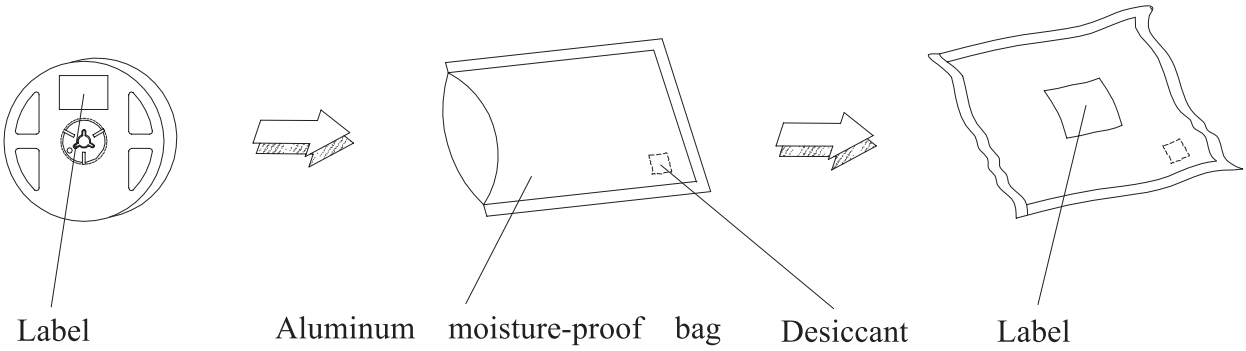

Soldering Condition

1.Pb-free solder temperature profile

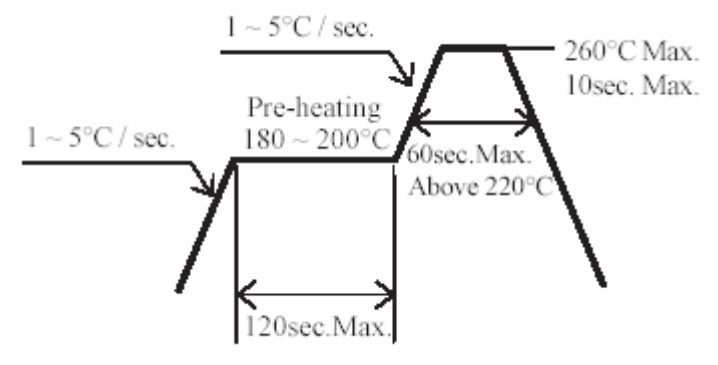

2.Reflow soldering should not be done more than two times.

3 When soldering, do not put stress on the LEDs during heating.

4 After soldering, do not warp the circuit board.

Soldering Iron

Each terminal is to go to the tip of soldering iron temperature less than 350℃ for 3 seconds within once in less than the soldering iron capacity 25W. Leave two seconds and more intervals, and do soldering of each terminal. Be careful because the damage of the product is often started at the time of the hand solder.