**SERIES: V78XX-1500** **DESCRIPTION: DC SWITCHING REGULATOR, NON-ISOLATED**

## DESCRIPTION

**The V78XX switching regulator series is designed to be a high efficiency drop-in replacement for 78XX linear regulators. Unlike linear regulators, the V78XX series does not require a heatsink, creating a much more compact solution. Built-in short-circuit and over-temperature protections ensure very rugged operations. Additionally, low ripple and noise performance make the parts useful in a wide range of applications.**

## FEATURES

- **efficiency up to 95%**
- **1.5A current output**
- **operating temp: -40 ~ +85˚C**
- **short circuit protection**
- **thermal shutdown**
- **low ripple and noise**
- **miniature SIP package, meets UL94-V0 requirement**
- **ultra low power loss**
- **negative output capacity**
- **pin compatible to LM78XX series**
- **MTBF >2,000,000 hours**




RoHS

## MODEL

| | input voltage | | output voltage | output current | efficiency level | |
|---|---|---|---|---|---|---|
| | min (V dc) | max (V dc) | max (V dc) | max. (mA) | Vin (min) | Vin (max) |
| V7802-1500 | 4.75<br>6.5 | 18<br>15 | 2.5<br>-2.5 | 1,500<br>-1,200 | 88<br>81 | 85<br>84 |
| V7803-1500 | 4.75<br>6.5 | 18<br>16 | 3.3<br>-3.3 | 1,500<br>-1,200 | 91<br>82 | 88<br>86 |
| V7805-1500 | 6.5<br>7 | 18<br>13 | 5<br>-5 | 1,500<br>-1,000 | 93<br>84 | 91<br>88 |
| V7806-1500 | 8<br>7 | 18<br>13 | 6.5<br>-6.5 | 1,500<br>-800 | 95<br>87 | 93<br>90 |

*add suffix "R" for 90˚ pins, for example: V7802-1500R

## OUTPUT

| parameter | conditions/description | min | nom | max | units |
|---|---|---|---|---|---|
| voltage accuracy | at 100% load | | ±2 | ±3 | % |
| line regulation | Vin = min to max at full load | | ±0.5 | ±0.75 | % |
| load regulation | 10% to 100% | | ±0.5 | ±1.0 | % |
| output ripple | 20 MHz bandwidth, typical application circuit | | 20 | 45 | mVp-p |
| short circuit protection | continuous, auto-restart | | | | |
| short circuit input power | | | 0.5 | 1.8 | W |
| current limit | | | 5,000 | | mA |
| switching frequency | full load, input voltage range | 300 | 340 | 380 | KHz |
| quiescent current | positive output<br>negative output | | 5<br>11 | 10<br>13 | mA<br>mA |
| thermal shutdown | | | 150 | | ˚C |
| temperature coefficient | -40 ~ +85˚C | | | ±0.02 | %/˚C |
| load capacitance | | | | 1,000 | µF |

**SERIES: V78XX-1500** **DESCRIPTION: DC SWITCHING REGULATOR, NON-ISOLATED**

## COMMON SPECIFICATIONS

| parameter | conditions/description | min | nom | max | units |
|---|---|---|---|---|---|
| operating temperature | | -40 | | 85 | ˚C |
| operating case temperature | | | | 100 | ˚C |
| storage temperature | | -55 | | 125 | ˚C |
| storage humidity | | | | 95 | % |
| cooling | free air convection | | | | |
| lead temperature | | | | 300 | ˚C |
| case material | plastic (UL94-V0) | | | | |
| MTBF | | 2,000,000 | | | hours |
| package weight | | | 4.0 | | g |

## SAFETY

| parameter | conditions/description | min | nom | max | units |
|---|---|---|---|---|---|
| conducted/radiated emissions | EN55022 class B | | | | |
| ESD | EN61000-4-2 class A | | | | |

## MECHANICAL DRAWING

**V78XX-1500**

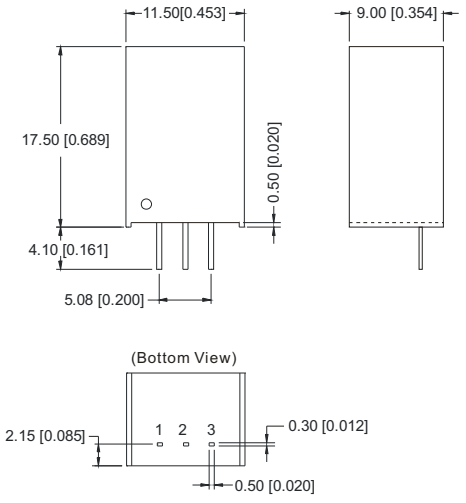


Note:
Unit:mm[inch]
Pin section tolerances:±0.10mm[±0.004inch]
General tolerances:±0.25mm[±0.010inch]

**V78XX-1500R**

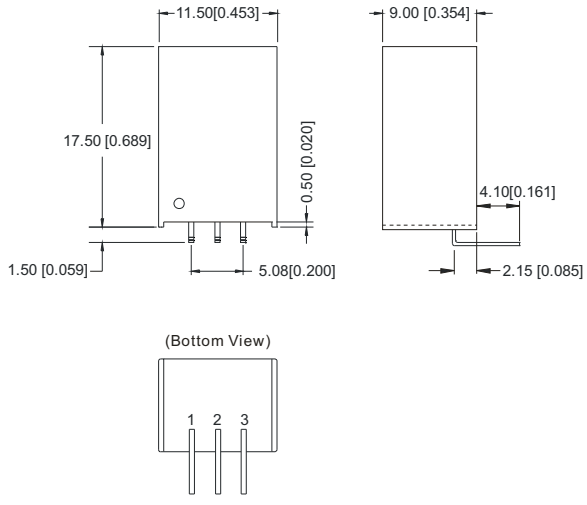


Note:
Unit:mm[inch]
Pin section tolerances:± 0.10mm[± 0.004inch]
General tolerances:± 0.50mm[± 0.020inch]

**SERIES:** V78XX-1500 **DESCRIPTION:** DC SWITCHING REGULATOR, NON-ISOLATED

## RECOMMENDED FOOTPRINT

**V78XX-1500**

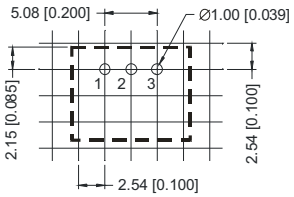


**V78XX-1500R**

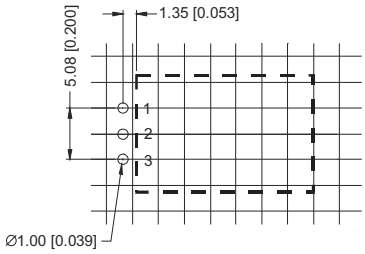


| FOOTPRINT DETAILS | | |
|---|---|---|
| Pin | Positive | Negative |
| 1 | +Vin | +Vin |
| 2 | GND | -Vout |
| 3 | +Vout | GND |

## DERATING CURVE

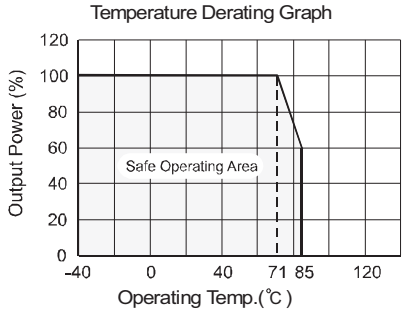


## EXTERNAL CAPACITOR TABLE

| Part Number | C1 (Ceramic capacitor) | C2 (Ceramic capacitor) |
|---|---|---|
| V7802-1500 | 10μF/25V | 22μF/6.3V |
| V7803-1500 | 10μF/25V | 22μF/6.3V |
| V7805-1500 | 10μF/25V | 22μF/16V |
| V7806-1500 | 10μF/25V | 22μF/16V |

## TYPICAL APPLICATION CIRCUIT

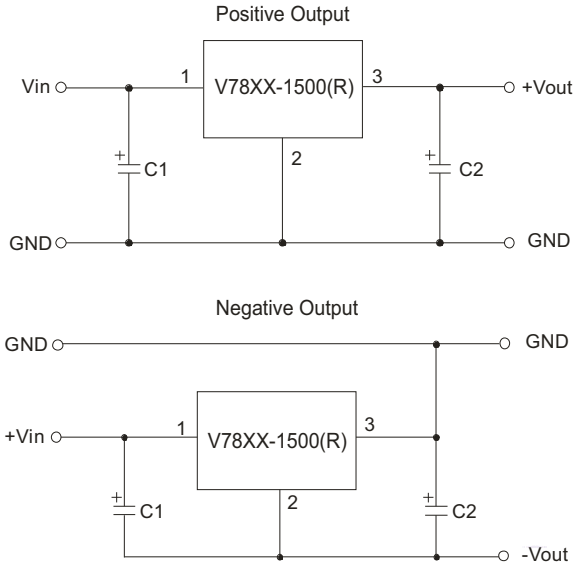


## APPLICATION EXAMPLE

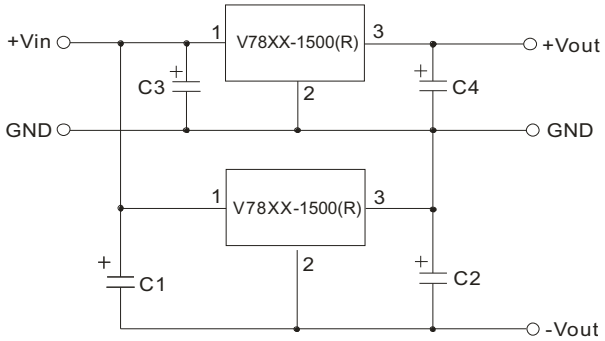


Note:

1. C1 and C2 are required and should be fitted close to the converter pins.
2. The capacitance of C1and C2 sees external capacitor table, it can be increased properly if required, and tantalum or low ESR electrolytic capacitors may also suffice.
3. No parallel connection or plug and play.

**SERIES: V78XX-1500** **DESCRIPTION: DC SWITCHING REGULATOR, NON-ISOLATED**

## INPUT FILTER CIRCUIT

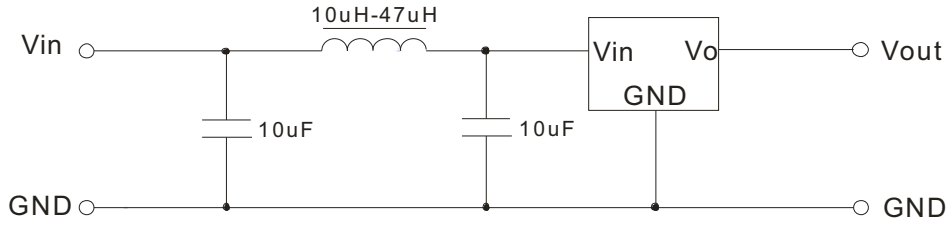


## OUTPUT FILTER CIRCUIT

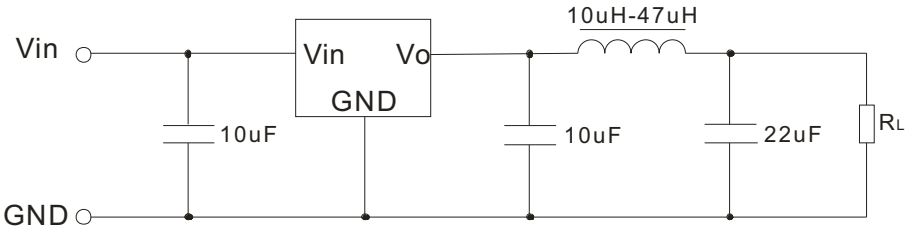


## EMC RECOMMENDED CIRCUIT

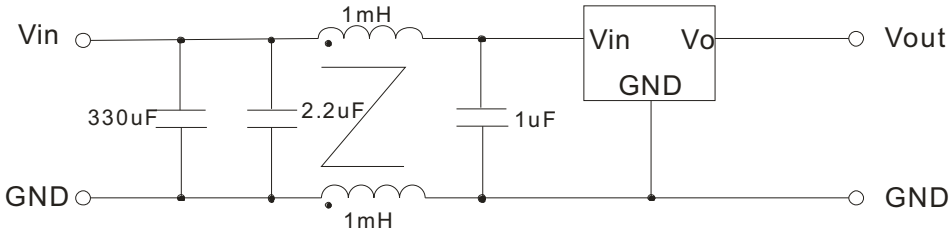

**SERIES:** V78XX-1500 **DESCRIPTION:** DC SWITCHING REGULATOR, NON-ISOLATED

## TEST CONFIGURATION

**Efficiency and Output Voltage Ripple Test**

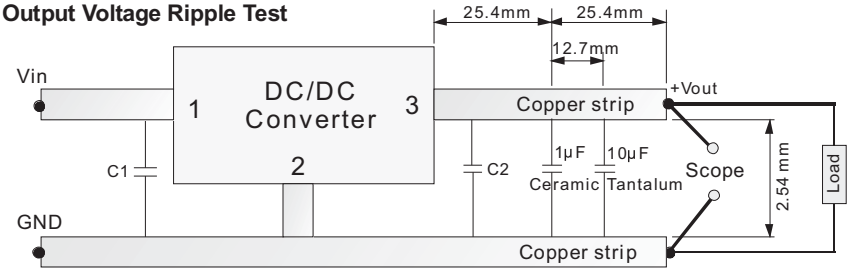


**Start-up and Load Transient Response Test**

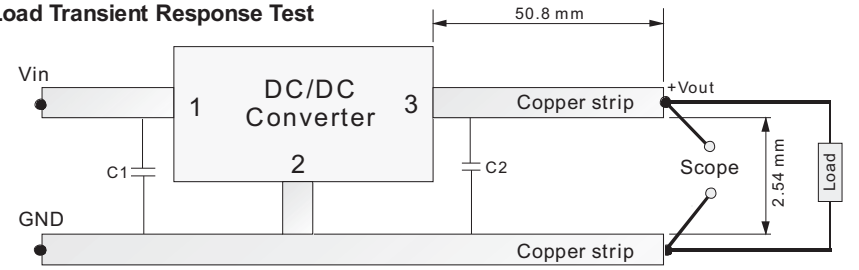


## EFFICIENCY AND RIPPLE CURVES

Efficiency

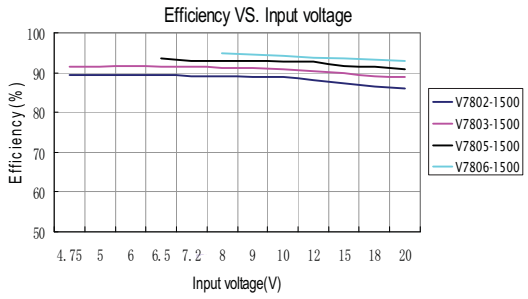


Ripple

