48Vin / 12Vout / 500Watts

DC-DC Converter Module

Model Number V48A12C500B*

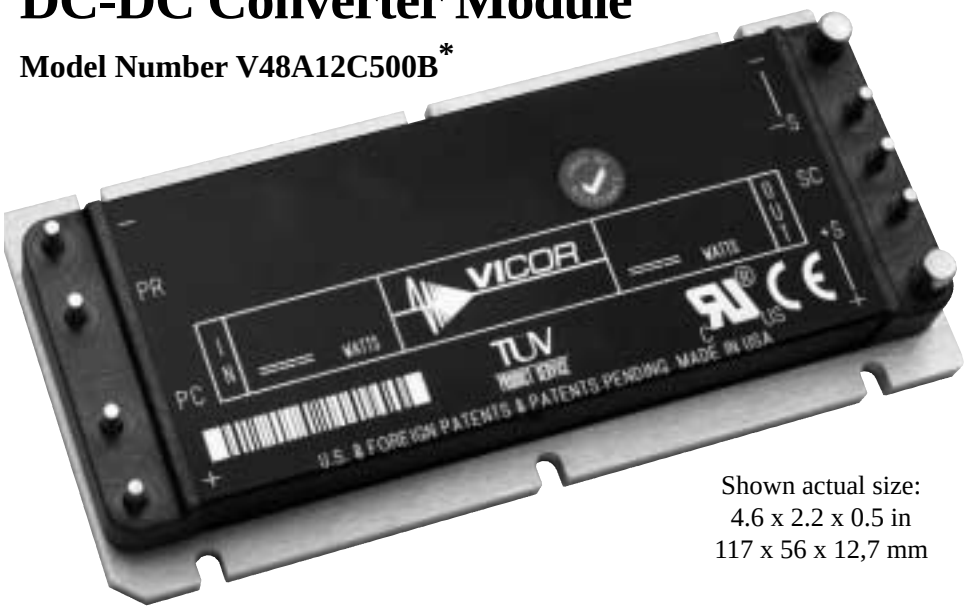

Shown actual size:
4.6 x 2.2 x 0.5 in
117 x 56 x 12,7 mm

Features

- DC input range: 36 - 75V
- Input surge withstand: 100V for 100ms
- DC output: 12V
- Programmable output: 10 to 110%
- Regulation: ±0.2% no load to full load
- Efficiency: 88%
- Maximum operating temperature: 100°C at full load
- Power density: 99W/cubic inch
- Height above board: 0.43 in. (10,9 mm)
- Parallelable, with N+M fault tolerance
- Low noise ZCS/ZVS architecture

Typical Applications:
telecommunications and distributed power systems

Product Overview

This DC-DC converter module uses 2nd Generation power processing, control and packaging technologies to provide the performance, flexibility and cost effectiveness expected of a mature power component. For example, a plated-cavity core transformer couples widely separated primary and secondary windings, resulting in low in-to-out parasitic capacitance and noise. High frequency ZCS/ZVS switching, advanced power semiconductor packaging and thermal management provide high power density with low temperature gradients. Extensive use of silicon integration results in 1/3 the part count of a 1st Generation converter.

* Part Numbering

V 48 A 12 C 500 B

- Input Voltage: 24 = 24Vin, 48 = 48Vin, 300 = 300Vin, 375 = 375Vin
- A = Maxi, B = Mini, C = Micro
- Output Voltage
- Output Power
- Pin Style
- Base-plate

Product Grade Temperatures (°C)

Grade	Storage	Operating
C =	– 40 to +125	– 20 to +100
T =	– 40 to +125	– 40 to +100
H =	– 55 to +125	– 40 to +100
M =	– 65 to +125	– 55 to +100

For pin styles see page 6. Slotted baseplate (style 1) requires no designator. For threaded baseplate add a “2” to the end of the part number. For thru-hole, add a “3”. *See page 7 for dimensions.*

Absolute Maximum Ratings

Parameter	Rating	Unit	Notes
+In to –In voltage	-0.5 to +75	Vdc	
+In to –In voltage	100	Vdc	<100ms
PC to –In voltage	-0.5 to +7.0	Vdc	
PR to –In voltage	-0.5 to +7.0	Vdc	
+Out to –Out voltage	-0.5 to +16.1	Vdc	
+Sense to –Out voltage	-0.5 to +16.1	Vdc	
–Sense to –Out voltage	1.0	Vdc	
SC to –Out voltage	-0.5 to +1.5	Vdc	
Isolation voltage (in to out)	2000	Vrms	
Isolation voltage (in to base)	1550	Vrms	
Isolation voltage (out to base)	500	Vrms	
Storage temperature (C–Grade)	-40 to +125	°C	See part numbering chart on this page for other product grades.
Operating temperature (C–Grade)	-20 to +100	°C	Baseplate
Pin soldering temperature	500 (260)	°F (°C)	<5 sec; wave solder
Pin soldering temperature	750 (390)	°F (°C)	<7 sec; hand solder
Mounting torque	5 (0.57)	in-lbs (N-m)	6 each, # 4-40 or M3

Thermal Resistance and Capacity

Parameter	Min	Typ	Max	Unit
Baseplate to sink; flat, greased surface		0.08		°C/Watt
Baseplate to sink; thermal pad (P/N 20263)		0.07		°C/Watt
Baseplate to ambient		4.9		°C/Watt
Baseplate to ambient; 1000 LFM		1.1		°C/Watt
Thermal capacity		165		Watt-sec/°C

site on VICOR at www.vicorpower.com

ELECTRICAL CHARACTERISTICS

Electrical characteristics apply over the full operating range of input voltage, output load (resistive) and baseplate temperature, unless otherwise specified. All temperatures refer to the operating temperature at the center of the baseplate.

■ MODULE OPERATING SPECIFICATIONS

Parameter	Min	Typ	Max	Unit	Notes
Operating input voltage	36	48	75	Vdc	
Input surge withstand			100	Vdc	<100ms
Output voltage setpoint	11.88	12	12.12	Vdc	Nominal input; full load; 25°C
Output OVP setpoint	13.7	14.3	14.9	Vdc	25°C; recycle input voltage to restart (1 minute off)
Output power			500	Watts	At 100°C baseplate temperature
Efficiency	86	88		%	Nominal input; 75% of full load; 25°C

■ MODULE INPUT SPECIFICATIONS

Parameter	Min	Typ	Max	Unit	Notes
Undervoltage turn-on		34.9	35.7	Vdc	
Undervoltage turn-off	29.4	30.5		Vdc	
Overvoltage turn-off/on	75.7	78.8	82.5	Vdc	
Dissipation, standby		10.8	15	Watts	No load

■ MODULE OUTPUT SPECIFICATIONS

Parameter	Min	Typ	Max	Unit	Notes
Line regulation		±0.02	±0.2	%	Low line to high line; full load
Load regulation		±0.06	±0.2	%	No load to full load; nominal input
Temperature regulation		±0.002	±0.005	% / °C	Over operating temperature range
Ripple and noise, p-p		60	75	mV	Nominal input, full load; 25°C; 20MHz bandwidth
Current limit	42.5	48	54.3	Amps	Output voltage 95% of nominal
Short circuit current	29.1	48	54.3	Amps	Output voltage <250mV
Power sharing accuracy		±2	±5	%	10 to 100% of full load
Programming range	10		110	%	Of nominal output voltage. For trimming below 90% of nominal, a minimum load of 10% of maximum rated power may be required.

Note: For important information relative to applications where the converter modules are subject to continuous dynamic loading, contact Vicor applications engineering at 800-927-9474.

■ MODULE MECHANICAL SPECIFICATIONS

Baseplate	Slotted (Style 1)	Slotted baseplate (style 1) requires no designator. For threaded baseplate add a "2" to the end of the part number. For thru-hole add a "3".
Pin style	Short (Style 1)	For long pin configuration add “L” to the end of the part number. *See page 7 for pin dimensions.*

MODULE CONTROL SPECIFICATIONS

Parameter	Min	Typ	Max	Unit	Notes
PRIMARY SIDE (PC = Primary Control; PR = Parallel)					
PC bias voltage	5.50	5.75	6.10	Vdc	PC current = 1.0 mA
current limit	1.5	2.1	3.0	mA	PC voltage = 5.5V
PC module disable	2.3	2.3	2.6	Vdc	Must be able to sink ≥4 mA. See Fig. 1
PC module enable delay		4	7	ms	
PC module alarm			0.5	Vavg	UV, OV, OT, module fault. See Figs. 2 and 4
PR emitter amplitude	5.7	5.9	6.1	Volts	PR load >30 ohms, < 30 pF
PR emitter current	150			mA	
PR receiver impedance	375	500	625	ohms	25°C
PR receiver threshold	2.4	2.5	2.6	Volts	Minimum pulse width: 20ns
PR drive capability			12	modules	Without PR buffer amplifier
SECONDARY SIDE (SC = Secondary Control)					
SC bandgap voltage	1.21	1.23	1.25	Vdc	Referenced to –Sense
SC resistance	990	1000	1010	ohms	
SC capacitance		0.033		µF	
SC module alarm		0		Vdc	With open trim; referenced to –Sense. See Fig. 6

MODULE GENERAL SPECIFICATIONS

Parameter	Min	Typ	Max	Unit	Notes
Remote sense (total drop)			0.5	Vdc	0.25V per leg (senses must be closed)
Isolation voltage (in to out)	2000			Vrms	Complies with reinforced insulation requirements
Isolation voltage (in to base)	1550			Vrms	Complies with basic insulation requirements
Isolation voltage (out to base)	500			Vrms	Complies with operational insulation requirements
Isolation resistance (in to out)		10		megohms	
Weight		7.3 (210)	8 (227)	ounces (grams)	
Temperature limiting	100	115		°C	See Figs. 2 and 4
Agency approvals		cULus, TÜV, CE			UL60950, EN60950, CSA60950, IEC 60950. With a fuse in series with the +Input

Note: The cover is electrically conductive and may be electrically connected to the baseplate.

CONTROL FUNCTIONS - PC PIN

Module Enable/Disable

The module may be disabled by pulling PC below 2.3V with respect to the –Input. This may be done with an open collector transistor, relay, or optocoupler. Multiple converters may be disabled with a single transistor or relay either directly or via "OR'ing" diodes. See Figure 1.

Primary Auxiliary Supply

At 5.7V, PC can source up to 1.5mA. In the example shown in Figure 3, PC powers a module enabled LED.

Module Alarm

The module contains "watchdog" circuitry which monitors input voltage, operating temperature and internal operating parameters. In the event that any of these parameters are outside of their allowable operating range, the module will shut down and PC will go low. PC will periodically go high and the module will check to see if the fault (as an example, overtemperature) has cleared. If the fault has not been cleared, PC will go low again and the cycle will restart. The SC pin will go low in the event of a fault and return to its normal state after the fault has been cleared. See Figures 2 and 4.

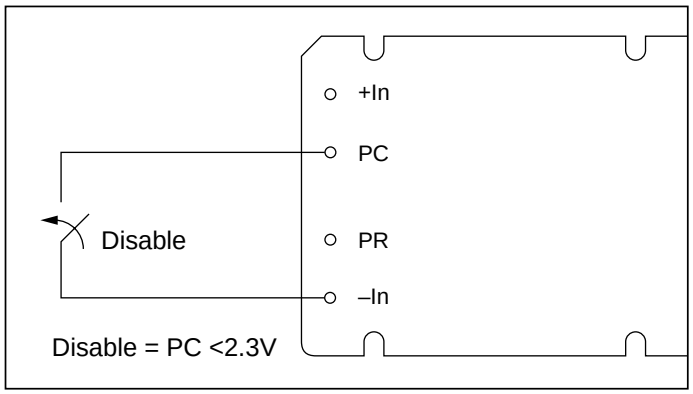

***Figure 1**—Module enable/disable.*

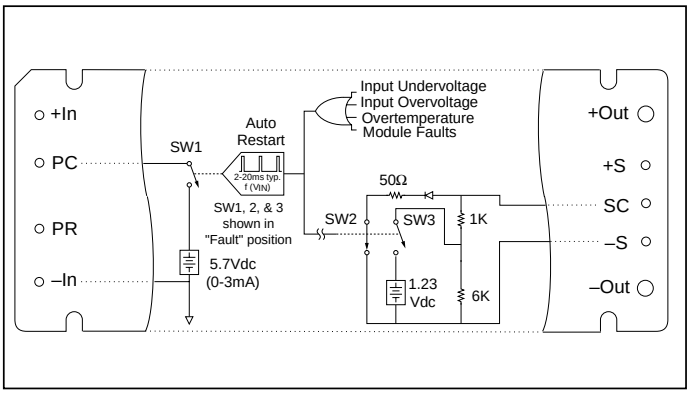

***Figure 2**—PC/SC module alarm logic.*

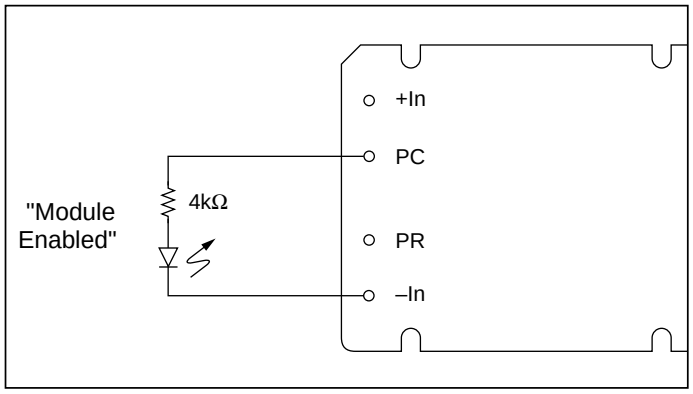

***Figure 3**—LED on-state indicator.*

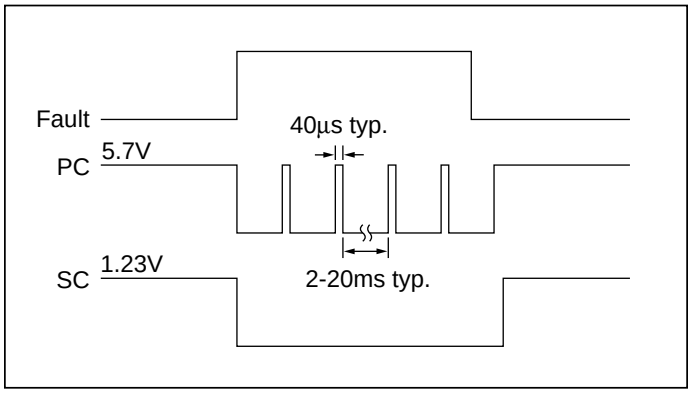

***Figure 4**—PC/SC module alarm timing.*

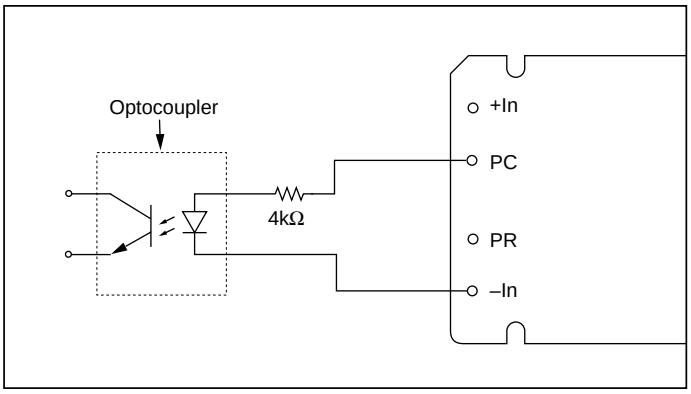

***Figure 5**—Isolated on-state indicator.*

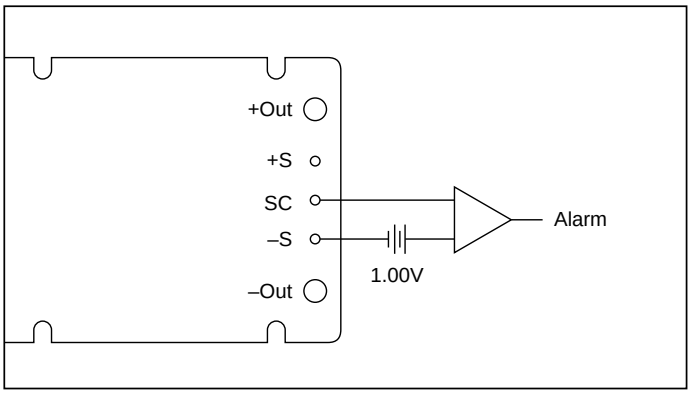

***Figure 6**—Secondary side on-state indicator.*

CONTROL FUNCTIONS - SC PIN

Output Voltage Programming

The output voltage of the converter can be adjusted or programmed via fixed resistors, potentiometers or voltage DACs. See Figures 7 and 8.

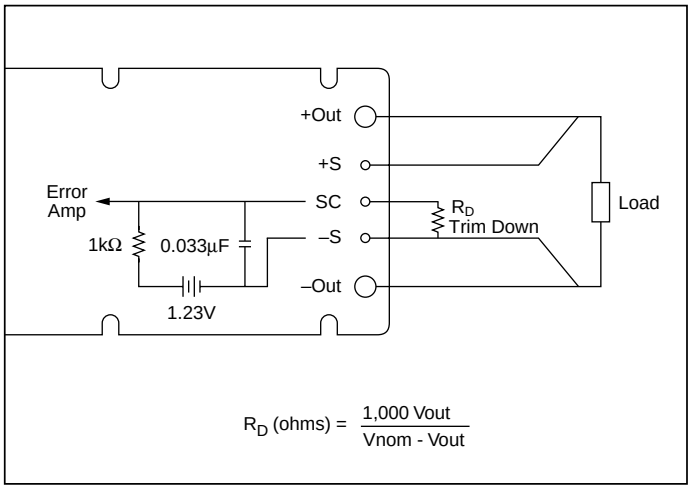

***Figure 7**—Output voltage trim down circuit.*

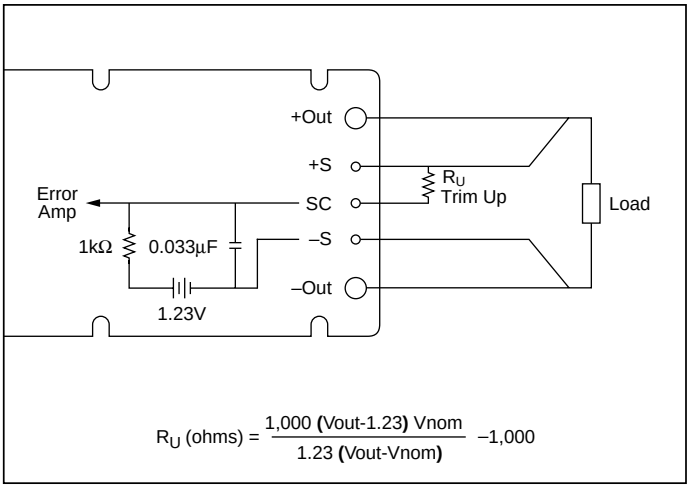

***Figure 8**—Output voltage trim up circuit.*

Trim Down

1. This converter is <u>not</u> a constant power device – it has a constant current limit. Hence, available output power is reduced by the same percentage that output voltage is trimmed down. Do not exceed maximum rated output current.
2. The trim down resistor must be connected to the –Sense pin.

Trim Up

1. The converter is rated for a maximum delivered power. To ensure that maximum rated power is not exceeded, reduce maximum output current by the same percentage increase in output voltage.
2. The trim up resistor must be connected to the +Sense pin.
3. Do not trim the converter above maximum trim range (typically +10%) or the output over voltage protection circuitry may be activated.

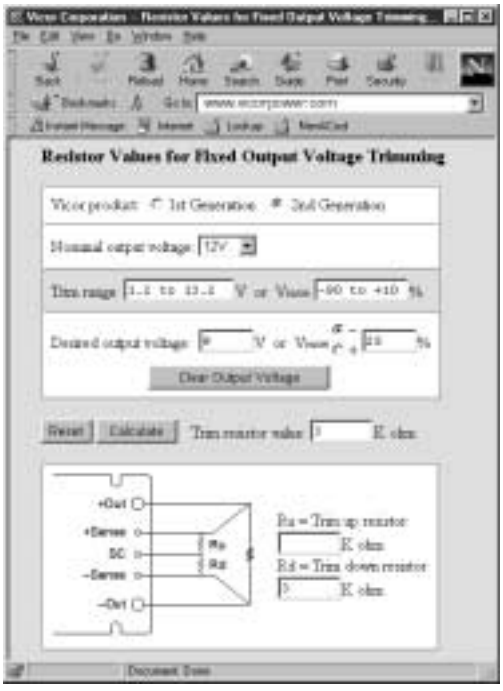

Trim resistor values calculated automatically:

On-line calculators for trim resistor values are available on the vicor website at: vicorpower.com/tools.html.

Resistor values can be calculated for fixed trim up, fixed trim down and for variable trim up or down cases for both 1st and 2nd Generation DC-DC converters.

In addition to trimming information, the web site and the Applications Manual also include design tips, applications circuits, EMC suggestions, thermal design guidelines and PDF data sheets for all available Vicor products.

CONTROL FUNCTIONS - PR PIN

Parallel Operation

The PR pin supports paralleling for increased power with N+1 (N+M) redundancy and phased array capability. Modules of the same input voltage, output voltage, and power level will current share if all PR pins are suitably interfaced.

Compatible interface architectures include the following:

DC coupled single-wire interface. All PR pins are directly connected to one another. This interface supports current sharing but is not fault tolerant. Minus In pins must be tied to the same electric potential. See Figure 9.

AC coupled single-wire interface. All PR pins are connected to a single communication bus through 0.001µF (500V) capacitors. This interface supports current sharing and is fault tolerant except for the communication bus. See Figure 10.

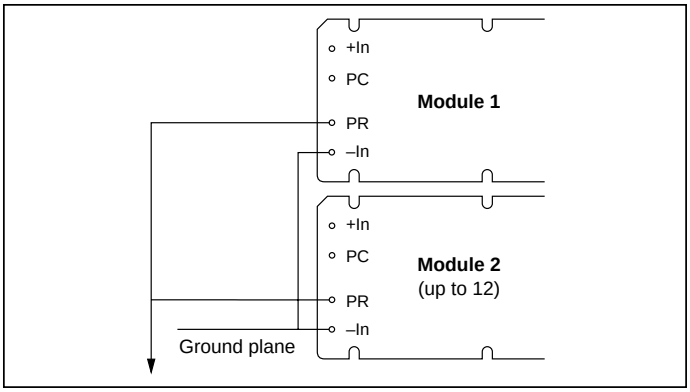

***Figure 9**—DC coupled single-wire interface.*

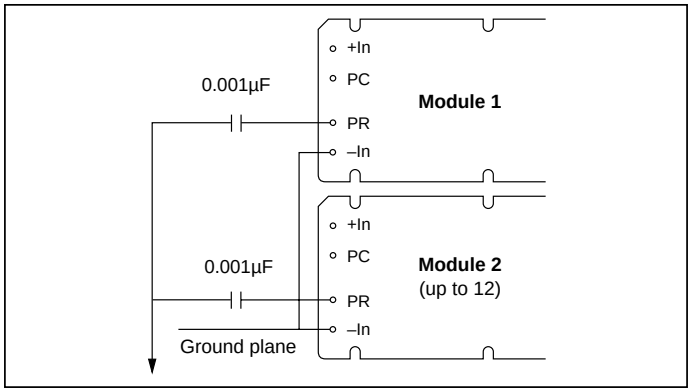

***Figure 10**—AC coupled single-wire interface.*

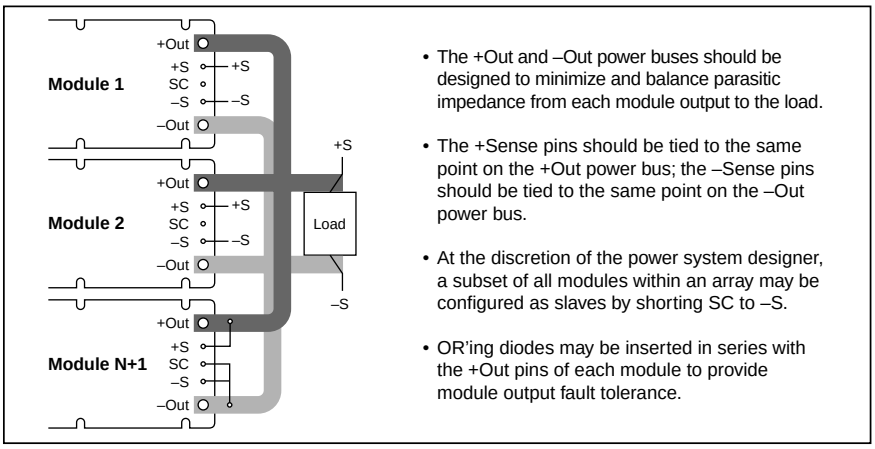

***Figure 11**—N+1 module array output connections.*

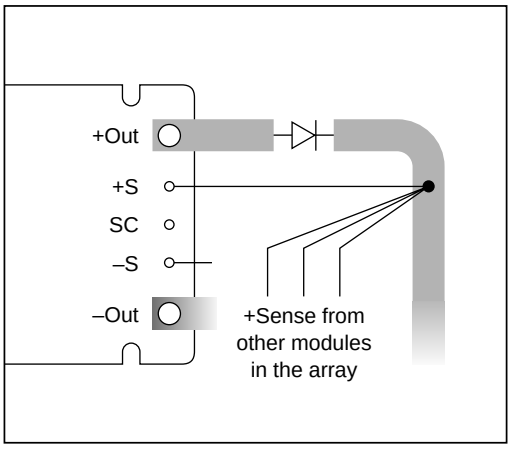

***Figure 12**—OR'ing diodes connections.*

PIN STYLES *

Designator	Description	Notes
(None)	Short solder	Requires in-board, mounting
L	Long solder	On-board mounting for 0.065" boards
S	Short ModuMate	SurfMate or in-board socket mounting
N	Long ModuMate	On-board socket mounting

* *Pin style designator follows the "B" after the output power and precedes the baseplate designator. Ex. V48B24C250BN — Long ModuMate Pins*

Set your site on VICOR at www.vicorpower.com

MECHANICAL DRAWINGS

MODULE OUTLINE

Converter Pins		
No.	*Function*	*Label*
1	+In	+
2	Primary Control	PC
3	Parallel	PR
4	–In	–
5	–Out	–
6	–Sense	–S
7	Secondary Control	SC
8	+Sense	+S
9	+Out	+

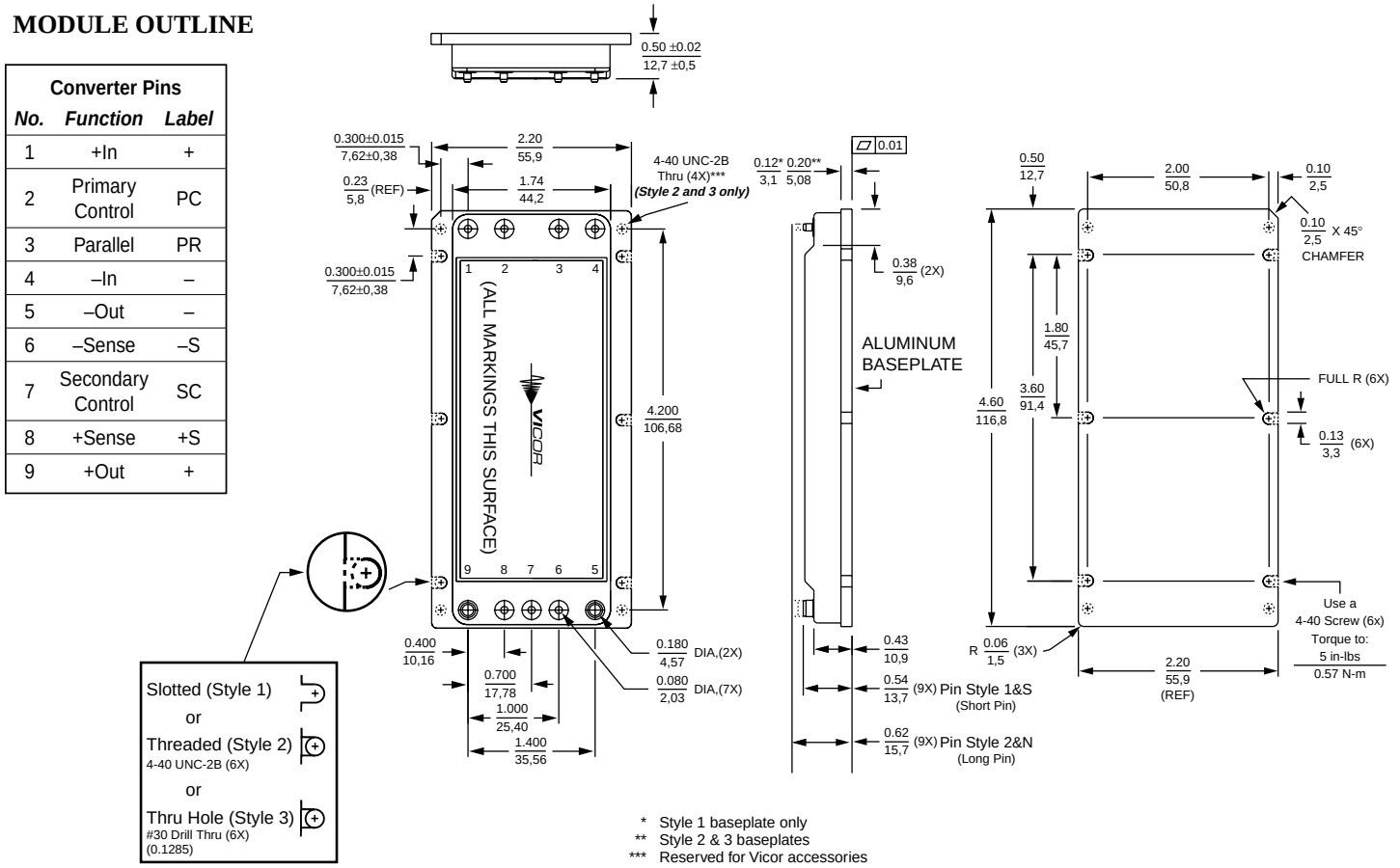

* Style 1 baseplate only
** Style 2 & 3 baseplates
*** Reserved for Vicor accessories
Not for mounting

PCB MOUNTING SPECIFICATIONS

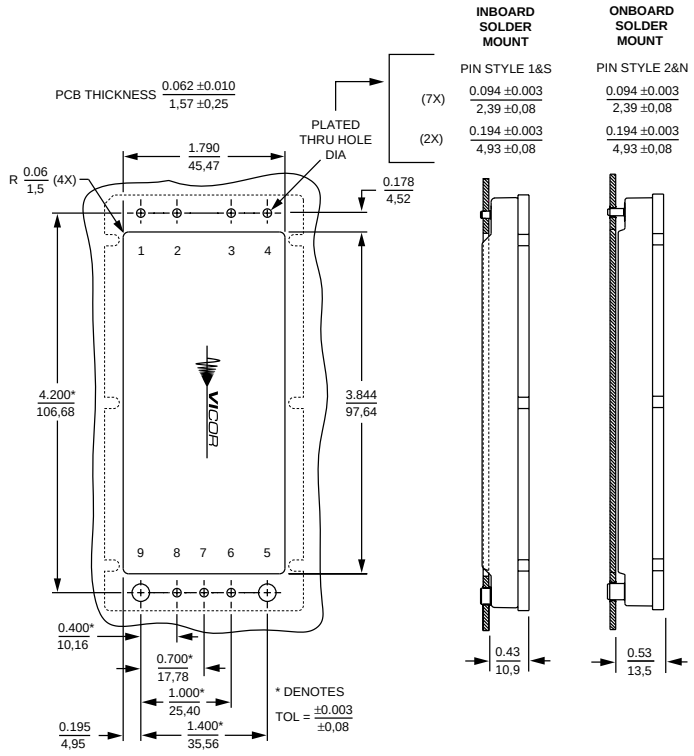

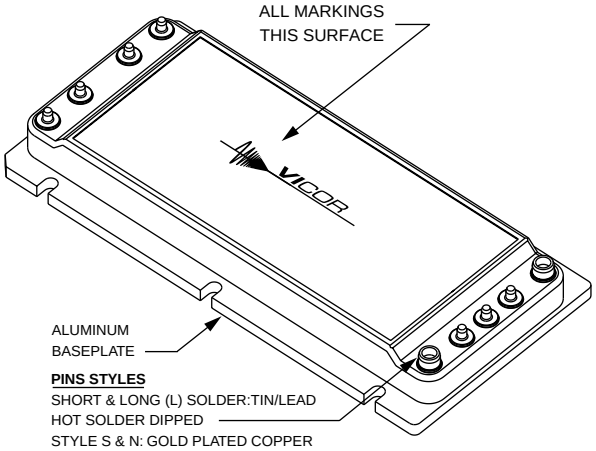

Unless otherwise specified, dimensions are in inches / mm

Decimals	Tol.	Angles
0.XX	±0.01 / ±0,25	±1°
0.XXX	±0.005 / ±0,127	

Vicor's comprehensive line of power solutions includes high density AC-DC and DC-DC modules and accessory components, fully configurable AC-DC and DC-DC power supplies, and complete custom power systems.

Information furnished by Vicor is believed to be accurate and reliable. However, no responsibility is assumed by Vicor for its use. Vicor components are not designed to be used in applications, such as life support systems, wherein a failure or malfunction could result in injury or death. All sales are subject to Vicor's Terms and Conditions of Sale, which are available upon request.

Specifications are subject to change without notice.

VICOR

Component Solutions
for Your Power System

Vicor Corporation
25 Frontage Road
Andover, MA, USA 01810
Tel: 800-735-6200
Fax: 978-475-6715

Email
Vicor Express: vicorexp@vicr.com
Technical Support: apps@vicr.com