P/N	APPLICABLE NOTE(S)
CC	1,2,3
CCSF	1,2,3

REVISIONS				
ZONE	REV	DESCRIPTION	DATE	BY
–	–	–	–	–

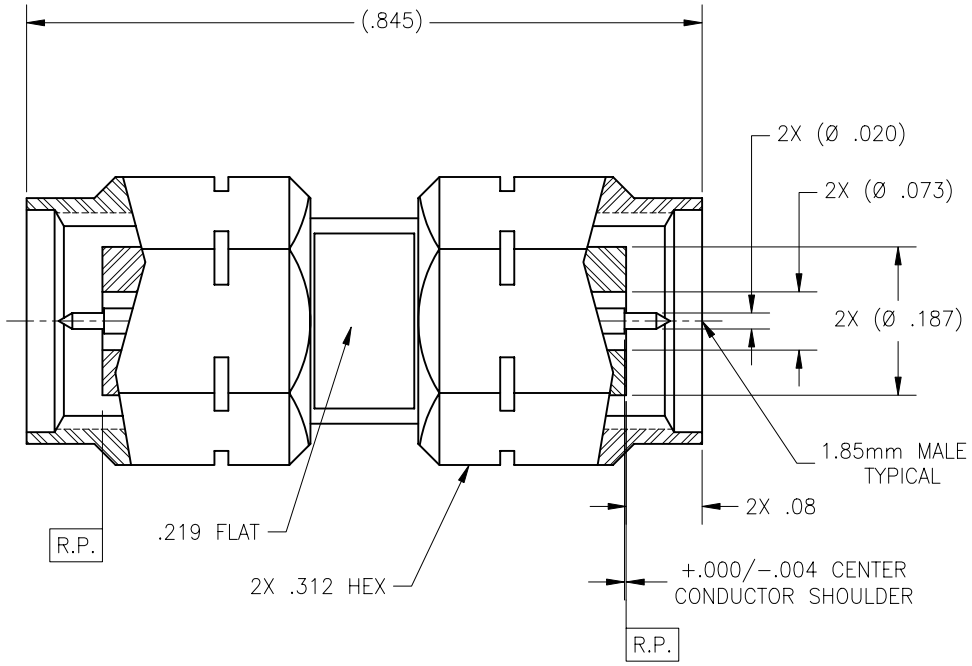

DRAWING NO.	REV.
V206	–

NOTE(S):

1. MATERIAL(S):
   - 1.1 BODY & INSERT: 303 SST PER ASTM A–582.
   - 1.2 CENTER CONDUCTOR & RETAINING RING: BeCu ALLOY PER ASTM B–196.
   - 1.3 INSULATOR: PTFE TEFLON PER ASTM D–1710.
   - 1.4 EPOXY: SIGMA VF TYPE HV

2. FINISH(ES):
   - 2.1 BODY & INSERT:
     FOR (CCSF): PASSIVATED PER ASTM A–967.
     FOR (CC): GOLD PLATE PER ASTM B–488 OVER NICKEL PLATE PER AMS–QQ–N–290.
   - 2.2 CENTER CONDUCTOR: GOLD PLATE PER ASTM B–488 OVER NICKEL PLATE PER AMS–QQ–N–290.
   - 2.3 INSULATOR AND EPOXY: NONE

3. ELECTRICAL PERFORMANCE(S):
   - 3.1 NOMINAL IMPEDANCE: 50 OHMS
   - 3.2 INSERTION LOSS IS 0.5dB, AT 40 GHz.
   - 3.3 VSWR: 1.3:1 dc–40 GHz

NOTICE

THIS DRAWING EMBODIES A CONFIDENTIAL PROPRIETARY DESIGN ORIGINATED BY TENSOLITE COMPANY AND ALL DESIGN, MANUFACTURING REPRODUCTION, USE AND SALE RIGHTS REGARDING THE SAME ARE EXPRESSLY RESERVED. IT IS SUBMITTED UNDER A CONFIDENTIAL RELATIONSHIP FOR A SPECIFIED PURPOSE AND THE RECIPIENT AGREES BY ACCEPTING THIS DRAWING NOT TO SUPPLY OR DISCLOSE ANY INFORMATION REGARDING IT TO ANY UNAUTHORIZED PERSON OR TO INCORPORATE IN OTHER PROJECTS ANY SPECIAL FEATURES PECULIAR TO THIS DESIGN. ALL PATENT RIGHTS HERETO ARE EXPRESSLY RESERVED BY TENSOLITE COMPANY, LONG BEACH, CALIFORNIA 90815

TOLERANCES AND NOTES EXCEPT AS NOTED

DIMENSIONS ARE IN INCHES.
LINEAR .XX ±.015 .XXX ±.005 ANGULAR ± 1/2"
FRACTION ± 1/32

1. MACHINE FINISH: 63 RMS
2. BREAK ALL SHARP EDGES .003 MAX.
3. MACHINED FILLETS .005 MAX.
4. MACHINED SURFACES SQUARE TO RESPECTIVE AXIS WITHIN .005 INCHES PER INCH.
5. MACHINED DIAMETERS CONCENTRIC WITHIN .002 T.I.R.
6. DIMENSIONS TO BE MET BEFORE PLATING.
7. CHAMFER ALL THREADS 45°.
8. THREADS PER H–28
9. REMOVE FRAYED EDGES ON TEFLON.
10. REMOVE ALL BURRS.

–	–	–	–
MATERIAL	SIZE	SPECIFICATION	PROCUREMENT

NEXT ASSY

APPROVAL INITIALS		DATE
DRAWN BY	ATV	01.25.02
CHECKED		
QUALITY		
ENGINEERING	ATV	01.25.02

Tensolite RF/Microwave Connectors
Long Beach, California 90815

TITLE: 1.85 mm MALE STRAIGHT TO 1.85mm MALE ADAPTER

SCALE	SUB-DIRECTORY\FILENAME	SHEET
8/1	OL_	1 OF 1

SIZE	CAGE CODE	DRAWING NO.	REV.
C	30990	V206	–