SOLITEL®

Installation and Operating Manual



Solitel

Vibrating

Rod Level

Switch

Magnetrol®

Read this Manual Before Installing
This manual provides information on the Solitel Vibrating Rod Level Switch. It is important that all instructions are read carefully and followed in sequence. Detailed instructions are included in the *Complete Installation* section of this manual.

Conventions Used in this Manual
Certain conventions are used in this manual to convey specific types of information. General technical material, support data, and safety information are presented in narrative form. The following styles are used for notes, cautions, and warnings.

Notes
Notes contain information that augments or clarifies an operating step. Notes do not normally contain actions. They follow the procedural steps to which they refer.

Cautions
Cautions alert the technician to special conditions that could injure personnel, damage equipment, or reduce a component's mechanical integrity. Cautions are also used to alert the technician to unsafe practices or the need for special protective equipment or specific materials. In this manual, a caution box indicates a potentially hazardous situation which, if not avoided, may result in minor or moderate injury.

Warnings
Warnings identify potentially dangerous situations or serious hazards. In this manual, a warning indicates an imminently hazardous situation which, if not avoided, could result in serious injury or death.

Safety Messages
The Solitel system is rated by the IEC for use in Category II, Pollution Degree 2 installations. Follow all standard industry procedures for servicing electrical and computer equipment when working with or around high voltage. Always shut off the power supply before touching any components. Although high voltage is not present in this system, it may be present in other systems.

Electrical components are sensitive to electrostatic discharge. To prevent equipment damage, observe safety procedures when working with electrostatic sensitive components.

This device complies with Part 15 of the FCC rules. Operation is subject to the following two conditions: (1) This device may not cause harmful interference, and (2) This device must accept any interference received, including interference that may cause undesirable operation.

Low Voltage Directive
For use in Category II installations. If equipment is used in a manner not specified by manufacturer, protection provided by equipment may be impaired.

WARNING! Explosion hazard. Do not connect or disconnect equipment unless power has been switched off or the area is known to be non-hazardous.

Notice of Copyright and Limitations
Copyright © 2009 Magnetrol International

Magnetrol reserves the right to make changes to the product described in this manual at any time without notice. Magnetrol makes no warranty with respect to the accuracy of the information in this manual.

Warranty
All Magnetrol electronic level and flow controls are warranted free of defects in materials or workmanship for one full year from the date of original factory shipment.

If returned within the warranty period; and, upon factory inspection of the control, the cause of the claim is determined to be covered under the warranty; then, Magnetrol will repair or replace the control at no cost to the purchaser (or owner) other than transportation.

Magnetrol shall not be liable for misapplication, labor claims, direct or consequential damage or expense arising from the installation or use of equipment. There are no other warranties expressed or implied, except special written warranties covering some Magnetrol products.

Quality Assurance
The quality assurance system in place at Magnetrol guarantees the highest level of quality throughout the company. Magnetrol is committed to providing full customer satisfaction both in quality products and quality service.

Magnetrol's quality assurance system is registered to ISO 9001 affirming its commitment to known international quality standards providing the strongest assurance of product/service quality available.

1.0 Introduction

The Solitel Vibrating Rod Level Switch provides reliable level detection of bulk solids and powders. This compact, integral switch is suitable for high or low level detection in hoppers and silos. It may also be used for plugged chute detection.

The rugged, single-piece probe is suitable for use in a variety of powders or granular materials with a minimum bulk density of less than one pound per cubic foot.

1.1 Principle of Operation

The Solitel rod vibrates at a 350 Hz frequency. When media makes contact with the rod, the vibration is dampened. The attenuation of the vibration is detected by the integral mount electronics, changing the status of the relay.

2.0 Installation

2.1 Unpacking

Unpack the instrument carefully. Make sure all components have been removed from the packing material. Inspect all components for damage, and report any concealed damage to the carrier within 24 hours.

Check the contents of the carton, making sure it agrees with the packing slip and the purchase order. Verify that the model number imprinted on the nameplate matches the number on the packing slip and the purchase order. Report any discrepancies to the factory. Check and record the serial number for future reference when ordering parts.

Serial Number

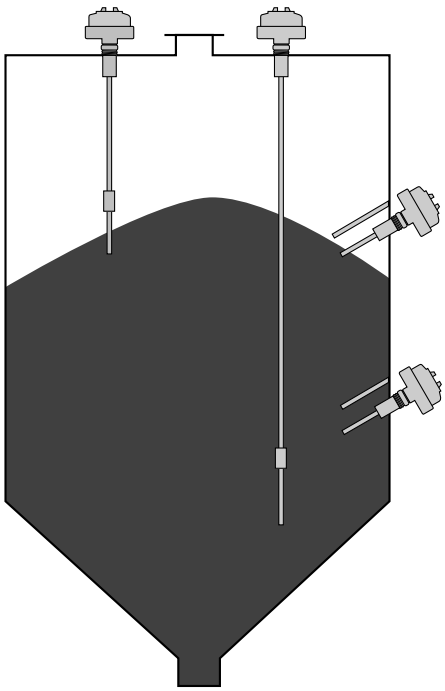

Figure 1

2.2 Mounting

Prior to installation, it is recommended that the unit be calibrated using a sample of the media to be measured. *Refer to Calibration, Section 2.5.*

IMPORTANT: Handle the instrument with great care, especially the probe. Any impact on the probe can damage the vibration system.

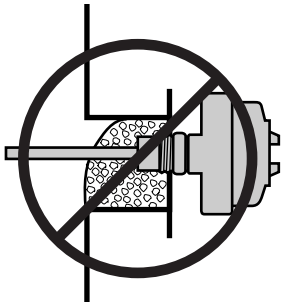

Figure 2

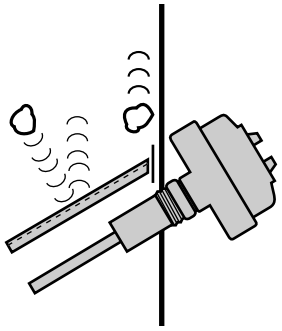

Figure 3

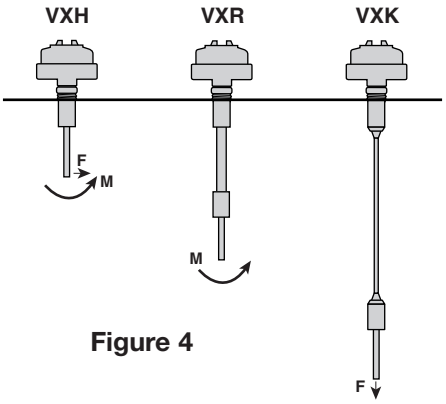

Figure 4

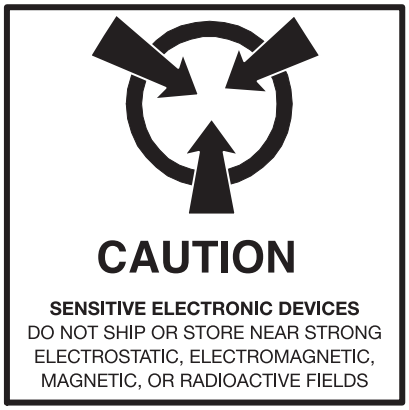

The Solitel switch is mounted to the vessel using a 1½" NPT threaded connection.

- Ensure that the tip of the probe is located at the desired switching point giving consideration to the slope angle of the material.
- The switch may be installed vertically or horizontally (at a downward angle) as shown in Figure 1 on page 3.
- Avoid mounting the sensor in a recess where build-up could dampen the vibration. See Figure 2.
- Do not cut or bend the vibrating rod.

IMPORTANT: A deflection plate is required when the probe is exposed to falling material, collapsed arch, or, in the case of a low level switch, when the drag force of the emptying material exceed the specifications. The deflector can be a baffle plate or angle iron (1½" × 1½" × ⅛") located 4 to 6 inches above the rod. See Figure 3.

Observe the specifications for bending force(F), torque(M), and pull force(F) as indicated below: See Figure 4.

Standard:	F = 100 pounds (445 N)
	M = 63 foot pounds (85 Nm)
Extended Rigid:	M = 63 foot pounds (85 Nm)
Extended Flexible:	F = 10,000 pounds (45 kN)

When using an extended length version for low level alarm, mount the probe above the outlet of the vessel to avoid the probe being dragged along by the outflowing material.

2.3 Electrostatic Discharge (ESD) Handling Procedure

Magnetrol's electronic instruments are manufactured to the highest quality standards. These instruments utilize electronic components which may be damaged by static electricity present in most work environments. The following steps are recommended to reduce the risk of component failure due to electrostatic discharge:

1. Ship and store circuit boards in anti-static bags. If an anti-static bag is not available, wrap board in aluminum foil. Do not place boards on foam packing materials.

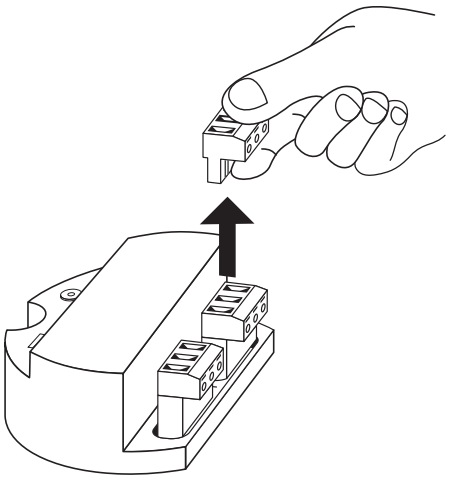

Figure 5

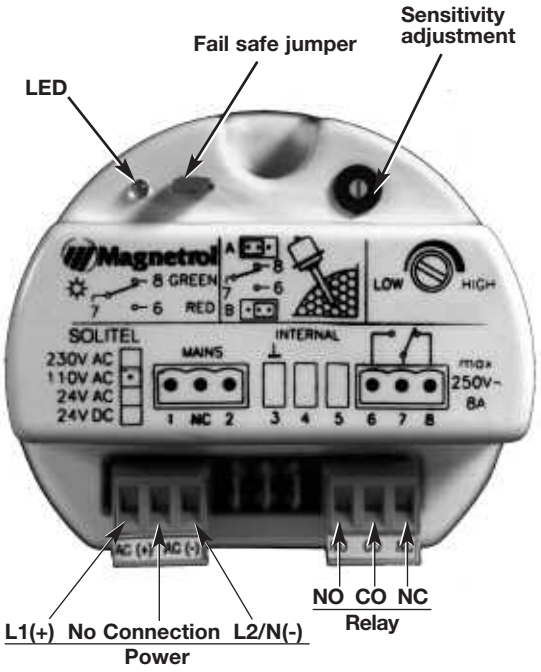

Figure 6

2. Use a grounding wrist strap when installing and removing circuit boards. A grounded workstation is also recommended.
3. Handle printed circuit boards only by the edges. Do not touch components or connector pins.
4. Ensure that all electrical connections are completely made and none are partial or floating. Ground all equipment to a good earth ground wiring.

2.4 Wiring

Manually position the housing in the correct direction to allow for easy wiring. The housing can rotate one full turn.

1. Make sure the power supply is turned off.
2. Unscrew and remove housing cover.
3. Connect power leads to the proper terminals. To simplify wiring, the terminal strips may be removed from the module by lifting the front edge of the terminal block. Refer to Figure 5.
   a. 120 VAC – Connect the "hot" wire to terminal marked L1 and the "neutral" to terminal L2/N. There is no connection to the center terminal.
   b. 240 VAC – Connect one wire to terminal L1 and the other wire to terminal L2/N. There is no connection to the center terminal.
   c. 24 VDC – Connect wires to terminals (+) and (-). There is no connection to the center terminal.
4. To ensure optimum noise immunity, attach the ground wire to the green grounding screw inside the housing base.

Caution: On 24 VDC units, the negative terminal of the power supply is isolated from ground and proper earth grounding of the power supply shield wire is necessary for noise immunity.

5. Connect relay terminals. Refer to Figure 6.
6. Set the fail-safe jumper as described in the table on page 6. For alarm applications, it is recommended that the de-energized status of the relay be used as the alarm status. This allows detection of power failure as an alarm status.
7. Wiring is complete. Replace the housing cover.
8. Apply power to the unit.

Power	Material Level	Fail-Safe Jumper	LED Color	Relay Coil	Relay Terminal	
					NO to CO 6–7	NC to CO 7–8
On	High	A position	Green	De-energized	Open	Closed
		B position	Red	Energized	Closed	Open
On	Low	A position	Red	Energized	Closed	Open
		B position	Green	De-energized	Open	Closed
Fail	High/Low	A/B		De-energized	Open	Closed

2.5 Calibration

Ensure that the fail-safe jumper is installed in the proper position as described in Table 1. The LED will show red when in alarm condition and green when in normal condition. Test the operation of the switch by holding, and then releasing the vibrating rod; the LED will change color.

The sensitivity of the switch can be changed using the density adjustment screw. Note that this adjustment screw has 270 degrees of rotation. Do not rotate past the stops.

NOTE: If the adjustment is too sensitive, the switch may detect even slight residue of material rather than level.

Prior to installation, it is recommended that the unit be calibrated using a sample of the media to be measured.

3.0 Reference Information

3.1 Troubleshooting

Solitel is a simple and reliable device. However, care must be taken to avoid impacting or damaging the vibrating probe.

In the event the Solitel stops vibrating, the following procedure will identify if the problem is with the electronic module or with the sensor:

Disconnect the wires going to the sensor. (Terminals 3, 4, and 5). The following gives the expected voltage range between the sensors.

Terminals	Voltage
3 and 4	4 to 6 VDC
3 and 5	0.3 to 1.0 VAC

If these voltage readings are not obtained, the electronics are defective and need to be replaced. If these voltages are measured, the problem is with the sensor.

NOTE: The probe and electronics must be matched to ensure proper operation. Use the following procedure to match the electronics and the vibrating probe:

1. Connect the wires from the sensor to terminals 3, 4, 5. There will be two wires of the same color and one wire of different color. The two similar wires go to terminals 4 and 5; the single wire goes to terminal 3.
2. If the potentiometer is labeled “density” turn to the low position – if labeled “sensitivity” turn to the high position. Note this potentiometer has a 270 degree turn.
3. Apply power to the electronic module.
4. Turn the electronic module over.

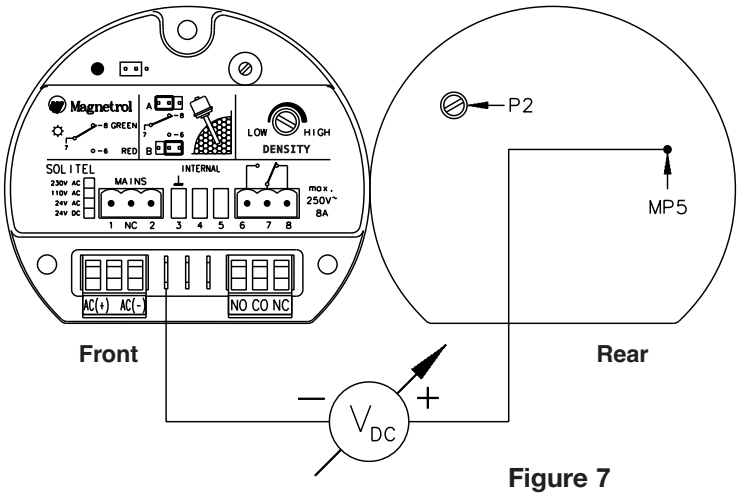

Figure 7

5. Connect a digital multimeter between points MP5 on the back of the module and ground connection (terminal 3 on the electronic module) or the body of the vibrating probe. See Figure 7 on page 7.
6. Adjust potentiometer P2 on the rear of the electronic module to obtain a voltage between 0.4 volts and 1.0 volts. The reading should be as close to 1.0 volt as possible.
7. Grasp the vibrating section of the sensor with your hand. The vibration should stop and the relay will change state.
8. Remove your hand from the sensor. The relay will change state.
9. The electronic module and probe are now matched.

3.2 Agency Approvals

3.2.1 CSA

Model	Approval
VXX-D1BX-XXX	Class I, Div. 2
	Groups A, B, C, & D
	Class II, Div. 1
	Groups E, F, & G
	Type 4X

NRTL/C

These units have been evaluated to the applicable UL and CSA standards. CSA is accredited as a NRTL (National Recognized Testing Laboratory) in the United States.

These units have been tested to EN 50081-2 and EN 50082-2 and are in compliance with the EMC Directive 89/336/EEC.

3.3 Replacement Parts

Item	Description	Part Number
1	Base	004-9189-001
2	Cover	004-9105-001
3	Cover o-ring	012-2101-345
4	Electronics module:	
	110 VAC	Z30-9011-001
	220 VAC	Z30-9011-002
	24 VDC	Z30-9011-004
5	Bracket	005-6680-001
6	Probe o-ring	012-2408-001
7	Snap ring	010-5138-001
8	Sleeve	004-0111-001
9	Probe	Consult Factory

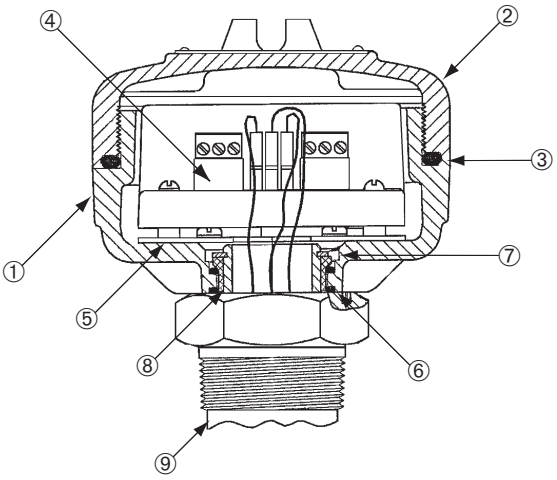

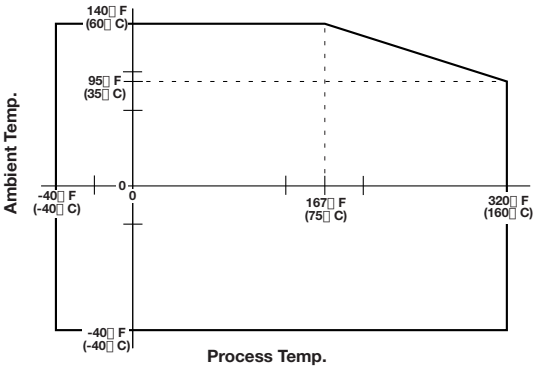

3.4 Specifications

3.4.1 Performance

Description	Specification
Input voltage	110 VAC +10/-15% 220 VAC +10/15% 24 VDC (±10%)
Power consumption	Less than or equal to 3 VA
Operation frequency	350 Hz
Output relay	SPDT 8 amp @ 250 VAC SPDT 1 amp @ 24 VDC
Time delay	6–10 seconds (depending on density adjustment)
Process connection	1½" NPT
Housing	NEMA 4X
Operating process temperature	
Standard	-4° F to +230° F (-20° C to +110° C)
Enhanced performance	-40° F to +320° F (-40° C to +160° C)
Ambient electronics temp.	-40° F to +140° F, see chart at left (-40° C to +60° C)
Relative humidity	98%
Maximum process pressure	360 psig
Materials specifications	
Vibrating rod	316 stainless steel
Rigid extension	316 stainless steel
Cable for flexible probe	Polyethelene coated steel
Insertion length	
VXH	8.25 inches (209 mm)
VXR	10 to 100 inches (25 to 254 cm)
VXK	3 to 65 feet (1 to 20 meters)
Maximum mechanical load on probe	
Stranded probe	63 Ft/lbs. (85 Nm)
Extended rigid probe	63 Ft/lbs. (85 Nm)
Flexible probe	10,000 Pounds (45 kN)

3.4.2 Physical

DIMENSIONAL SPECIFICATIONS inches (mm)

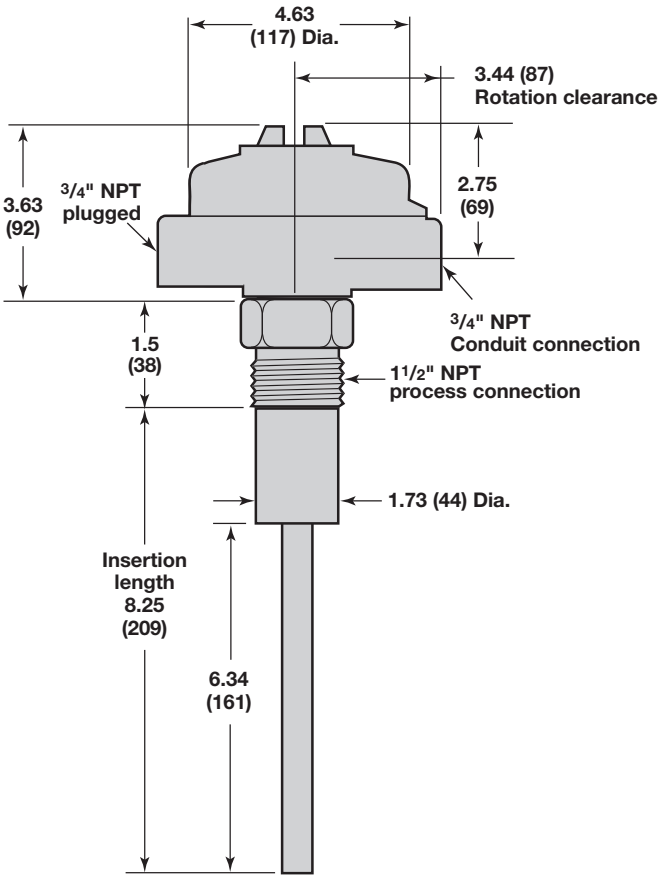

Standard Length

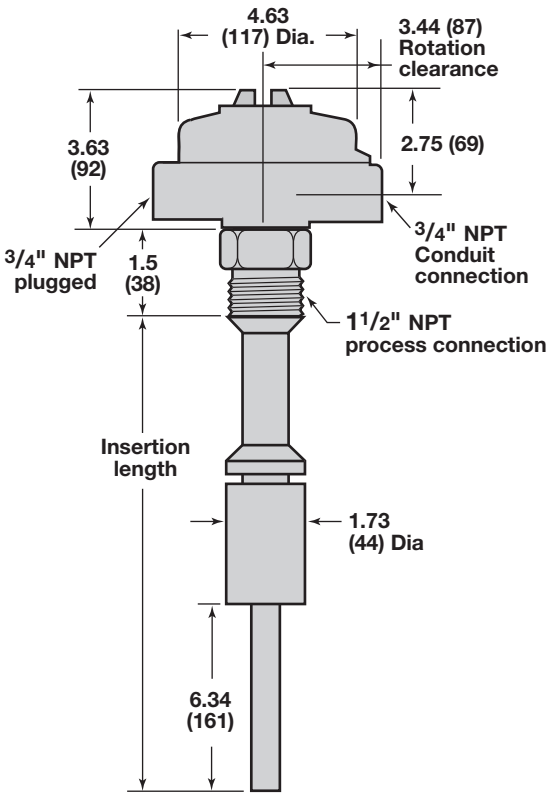

Extended Rigid Probe

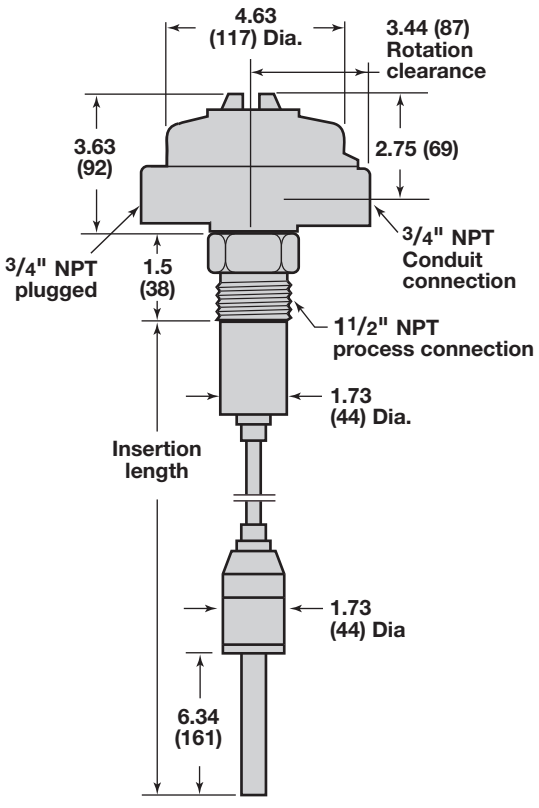

Extended Flexible Probe

3.5 Model Numbers

3.5.1 Solitel Level Switch Standard and Extended Rigid Probe

DESIGN TYPE

1	Standard, length in inches
2	Enhanced performance*, length in inches
3	Standard length in centimeters
4	Enhanced performance*, length in centimeters

*Recommended for temperatures up to +320° F (+160° C) or for sticky materials.

PROBE TYPE

H	Standard rigid, 8.25" (21 cm) length
R	Extended rigid

INPUT VOLTAGE

0	110 VAC
1	220 VAC
2	24 VDC

INSERTION LENGTH

Design type code 1, 2, 3, or 4 with probe type code R: Code 000 fixed length of 8.25" (21 cm)
Design type code 1 or 2 with probe type code R 10 to 100 inches — Example: 10 inches = code 010
Design type code 3 or 4 with probe type code R 25 to 254 centimeters — Example: 25 cm = code 025

V			—	D	1	B		—			

3.5.2 Solitel Level Switch Extended Flexible Probe

DESIGN TYPE

1	Standard, length in inches
3	Standard, length in meters

INPUT VOLTAGE

0	110 VAC
1	220 VAC
2	24 VDC

INSERTION LENGTH

Design type code 1, 3 to 65 feet: Example: 10 feet = code 010
Design type code 3, 1 to 20 meters Example: 15 meters = code 015

V		K	—	D	1	B		—			

Service Policy

Owners of Magnetrol controls may request the return of a control or any part of a control for complete rebuilding or replacement. They will be rebuilt or replaced promptly. Controls returned under our service policy must be returned by Prepaid transportation. Magnetrol will repair or replace the control at no cost to the purchaser (or owner) other than transportation if:

1. Returned within the warranty period; and
2. The factory inspection finds the cause of the claim to be covered under the warranty.

If the trouble is the result of conditions beyond our control; or, is NOT covered by the warranty, there will be charges for labor and the parts required to rebuild or replace the equipment.

In some cases it may be expedient to ship replacement parts; or, in extreme cases a complete new control, to replace the original equipment before it is returned. If this is desired, notify the factory of both the model and serial numbers of the control to be replaced. In such cases, credit for the materials returned will be determined on the basis of the applicability of our warranty.

No claims for misapplication, labor, direct or consequential damage will be allowed.

Return Material Procedure

So that we may efficiently process any materials that are returned, it is essential that a "Return Material Authorization" (RMA) number be obtained from the factory, prior to the material's return. This is available through Magnetrol's local representative or by contacting the factory. Please supply the following information:

1. Company Name
2. Description of Material
3. Serial Number
4. Reason for Return
5. Application

Any unit that was used in a process must be properly cleaned in accordance with OSHA standards, before it is returned to the factory.

A Material Safety Data Sheet (MSDS) must accompany material that was used in any media.

All shipments returned to the factory must be by prepaid transportation.

All replacements will be shipped F.O.B. factory.

NOTE: See Electrostatic Discharge Handling Procedure on page 4.

Magnetrol®

5300 Belmont Road • Downers Grove, Illinois 60515-4499 • 630-969-4000 • Fax 630-969-9489 • www.magnetrol.
145 Jardin Drive, Units 1 & 2 • Concord, Ontario Canada L4K 1X7 • 905-738-9600 • Fax 905-738-1306
Heikensstraat 6 • B 9240 Zele, Belgium • 052 45.11.11 • Fax 052 45.09.93
Regent Business Ctr., Jubilee Rd. • Burgess Hill, Sussex RH15 9TL U.K. • 01444-871313 • Fax 01444-871317

Copyright © 2009 Magnetrol International, Incorporated. All rights reserved. Printed in the USA

BULLETIN: 56-601.6
EFFECTIVE: February 2004
SUPERSEDES: February 2003