Honeywell

V-Basic Standard V15 Series

Electromechanical Basic Switch



DESCRIPTION

Honeywell's V-Basic Standard V15 series is an electromechanical switch designed for enhanced reliability at a great value. This switch is often ideal for "low-cost-of-failure" – where the cost to replace the switch or to service any failure related to the switch is minimal. The V15 is designed for applications requiring ≥ 100 g of operating force and electrical ratings ranging from 16A to 22A.

The V15 Series switch offers a wide range of standard offerings, including a choice of actuators, electrical ratings, operating forces, and circuitry, and holds global approvals (ENEC, CQC, UL, cUL).

FEATURES

- Broad range of electrical loads
- Straight, roller, simulated roller, and special actuators
- Special terminations available upon request
- Precision operation and application versatility
- Wide temperature range
- Global approvals (ENEC, CQC, UL, cUL)

POTENTIAL APPLICATIONS

- Appliance
- Gaming
- Vending machines
- Water heaters
- Industrial controls

BENEFITS

- Compatible with many applications due to the switches design flexibility, broad range of electrical loads, and actuators
- Accepts insulated connections, most quick connect openings
- Reliability, repeatability within range of conditions

V-Basic Standard V15 Series

Specifications	
Insulation resistance	≥ 100 mOhm (500 Vdc)
Dielectric strength	1000 Vac (50 Hz/60 Hz, 1 min.)
Contact resistance	100 milliOhm max.
Operating frequency - electrical	10 to 30 operations per minute
Operating frequency – mechanical	300 operations per minute max.
Operating speed	0,1mm - 1m/sec.
Service life mechanical	5 million cycles (operating force ≤ 200 g); 1 million cycles (operating force > 200 g)
Service life electrical	6000 or 50000 operations minimum
Storage temperature	-25 °C to 100 °C [-13 °F to 212 °F]
Storage humidity	85 % RH max.
Micro disconnection (μ)	< 3 mm contact gap
Agency approvals	ENEC, CQC, UL, cUL

ELECTRICAL CHARACTERISTICS

Electrical rating	
16	ENEC/CQC ; 16(4) A, 250 Vac (50000 cycles) UL/cUL ; 16½ HP, 125 Vac/250 Vac (6000 cycles)
22	ENEC/CQC: 22(8)A, 250 Vac (10000 cycles) UL/cUL: 22 A 1HP, 125 Vac/250Vac (6000 cycles)

DIMENSIONS

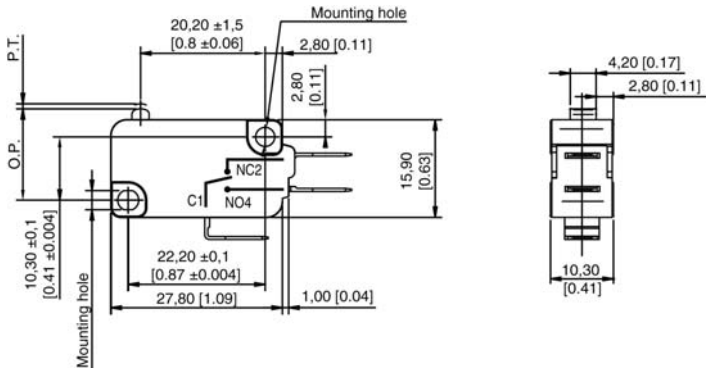

MOUNTING HOLE DIMENSIONS

Metric mounting for Ø3 mm pins or screws

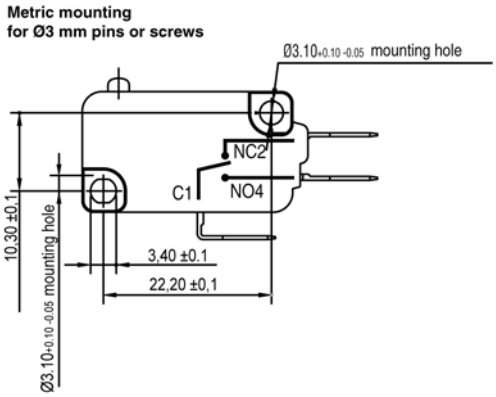

USA mounting for #4 screws

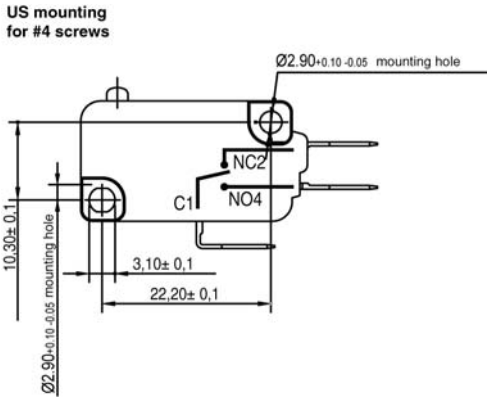

CONNECTION DIMENSIONS

C-style quick connect - 6,35 mm wide x 0,8 mm thick

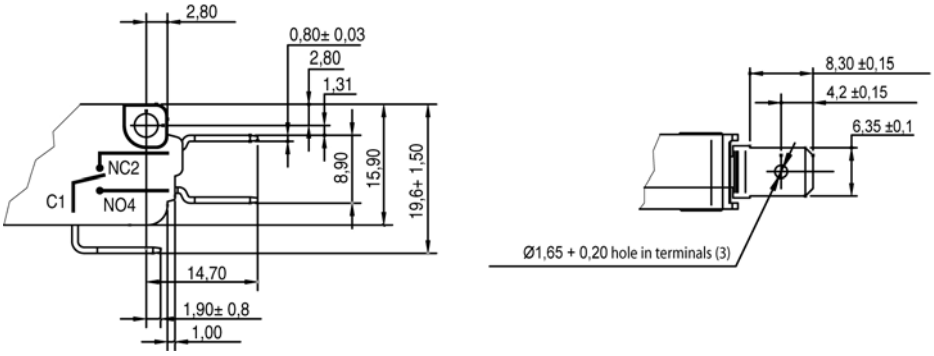

D-style quick connect - 4,80 mm wide x 0,8 mm thick

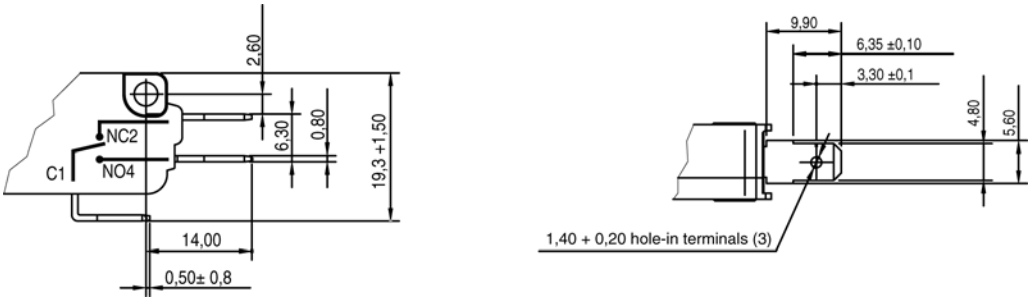

E- style quick connect - 4,80 mm wide x 0,5 mm thick

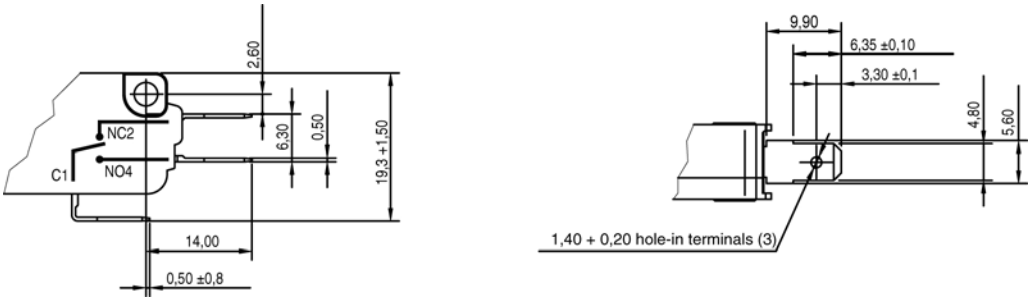

V-Basic Standard V15 Series

STANDARD LEVER OPTIONS

Lever code/Description	Outline dimensions
A01/Straight short lever	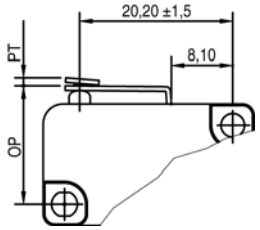
A02/Standard straight lever	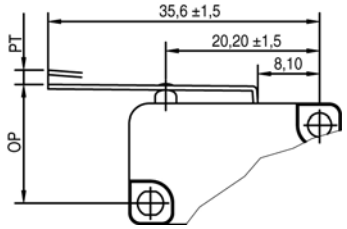
A03/Long straight lever	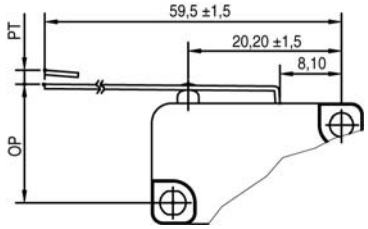
A04/Simulated roller lever	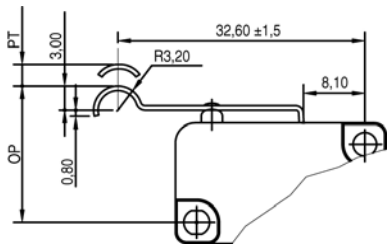
A05/Short roller lever	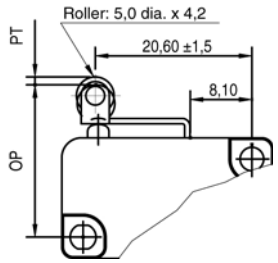
A06/Roller lever	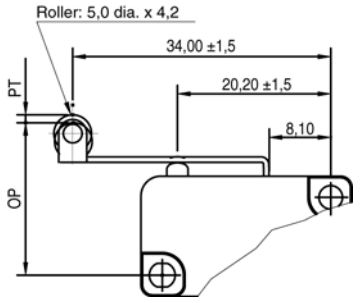

Electromechanical Basic Switches

NOMENCLATURE TREE

V15	T	16	–	C	Z	200	A	01	–	XX	K
Switch type	Temperature grade	Electrical rating		Terminal style	Circuit code	Operating force at pin plunger, max.	Lever position	Lever type		Special designator	Mounting holes
V15 Series switch	T T125	16 ENEC/CQC: 16(4) A, 250 Vac UL/cUL: 16½ HP 125 Vac/250 Vac		C 6,30 mm x 0,80 mm [0.250 in x 0.032 in] Quick connect	Z SPDT	100 100 gf 0.98 N	No lever pin plunger	No lever pin plunger		A special designator letter is used only when terminal type is "X" or actuator/lever type is "99" to specify that the terminals or the actuator of the switch is special. Review product specification to determine the exact differences.	Metric Ø3.1 mm
	H T150	22 ENEC/CQC: 22(8)A, 250 Vac UL/cUL: 22 A 1HP 125 Vac/250Vac		D 4,70 mm x 0,8 mm [0.187 in x 0.032 in] Quick connect	P SPST-NO	200 200 gf 1.96 N	A Far from pin plunger	01 Short straight lever			K USA Ø2.9 mm
				E 4,70 mm x 0,5 mm [0.187 in x 0.020 in] Quick connect	C SPST-NC	300 300 gf 2.94 N	B Near pin plunger	02 Std. straight lever			
						400 400 gf 3.92 N		03 Long straight lever			
								04 Simulated roller lever			
								05 Roller lever			
								06 Long roller lever			
								99 Special lever			

ORDER GUIDE

The V-Basics standard V15 series provide customers with the flexibility to request quotes FOB Hong Kong or FOB Freeport. In addition, drop shipments can be arranged to any location in Asia Pacific.

- FOB Freeport orders will be entered using ICOM. Lead time 8 weeks.
- FOB New House orders will be entered using SAP. Lead time 8 weeks.
- FOB Hong Kong or drop shipments a special order request form will need to be submitted please contact your application engineer or product manager for details.

⚠ WARNING

PERSONAL INJURY

DO NOT USE these products as safety or emergency stop devices or in any other application where failure of the product could result in personal injury.

Failure to comply with these instructions could result in death or serious injury.

⚠ WARNING

MISUSE OF DOCUMENTATION

- The information presented in this product sheet is for reference only. Do not use this document as a product installation guide.
- Complete installation, operation, and maintenance information is provided in the instructions supplied with each product.

Failure to comply with these instructions could result in death or serious injury.

WARRANTY/REMEDY

Honeywell warrants goods of its manufacture as being free of defective materials and faulty workmanship. Honeywell's standard product warranty applies unless agreed to otherwise by Honeywell in writing; please refer to your order acknowledgement or consult your local sales office for specific warranty details. If warranted goods are returned to Honeywell during the period of coverage, Honeywell will repair or replace, at its option, without charge those items it finds defective. **The foregoing is buyer's sole remedy and is in lieu of all other warranties, expressed or implied, including those of merchantability and fitness for a particular purpose. In no event shall Honeywell be liable for consequential, special, or indirect damages.**

While we provide application assistance personally, through our literature and the Honeywell web site, it is up to the customer to determine the suitability of the product in the application.

Specifications may change without notice. The information we supply is believed to be accurate and reliable as of this printing. However, we assume no responsibility for its use.

SALES AND SERVICE

Honeywell serves its customers through a worldwide network of sales offices, representatives and distributors. For application assistance, current specifications, pricing or name of the nearest Authorized Distributor, contact your local sales office or:

E-mail: info.sc@honeywell.com

Internet: www.honeywell.com/sensing

Phone and Fax:

Asia Pacific	+65 6355-2828
	+65 6445-3033 Fax
Europe	+44 (0) 1698 481481
	+44 (0) 1698 481676 Fax
Latin America	+1-305-805-8188
	+1-305-883-8257 Fax
USA/Canada	+1-800-537-6945
	+1-815-235-6847
	+1-815-235-6545 Fax

Sensing and Control
Honeywell
1985 Douglas Drive North
Golden Valley, MN 55422
www.honeywell.com/sensing

Honeywell

004945-2-EN IL50 GLO Printed in USA
October 2007
Copyright © 2007 Honeywell International Inc. All rights reserved.