Dual High-Voltage TMBS® (Trench MOS Barrier Schottky) Rectifier

Ultra Low V_F = 0.5 V at I_F = 2.5 A

eSMP® Series
SMPD (TO-263AC)

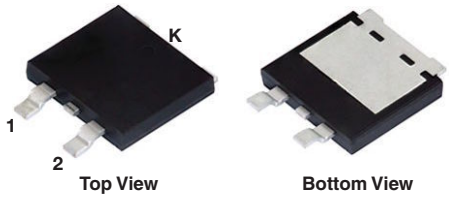

Top View Bottom View

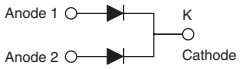

FEATURES

- Trench MOS Schottky technology
- Very low profile - typical height of 1.7 mm
- Ideal for automated placement
- Low forward voltage drop, low power losses
- High efficiency operation
- Meets MSL level 1, per J-STD-020, LF maximum peak of 260 °C
- AEC-Q101 qualified available:
  - Automotive ordering code: base P/NHM3
- Material categorization: for definitions of compliance please see www.vishay.com/doc?99912

AUTOMOTIVE GRADE Available

RoHS COMPLIANT

HALOGEN FREE

DESIGN SUPPORT TOOLS AVAILABLE

3D Models

TYPICAL APPLICATIONS

For use in high frequency DC/DC converters, switching power supplies, freewheeling diodes, OR-ing diode, and reverse battery protection in commercial, industrial, and automotive application.

PRIMARY CHARACTERISTICS	
$I_{F(AV)}$	2 x 5 A
V_{RRM}	100 V
I_{FSM}	80 A
V_F at I_F = 5 A (T_A = 125 °C)	0.62 V
T_J max.	175 °C
Package	SMPD (TO-263AC)
Circuit configuration	Common cathode

MECHANICAL DATA

Case: SMPD (TO-263AC)
Molding compound meets UL 94 V-0 flammability rating
Base P/N-M3 - halogen-free, RoHS-compliant
Base P/NHM3 - halogen-free, RoHS-compliant, and AEC-Q101 qualified

Terminals: matte tin plated leads, solderable per J-STD-002 and JESD 22-B102
M3 and HM3 suffix meet JESD 201 class 2 whisker test

Polarity: as marked

MAXIMUM RATINGS (T_A = 25 °C unless otherwise noted)

PARAMETER		SYMBOL	V10DM100C	UNIT
Device marking code			V10DM100C	
Maximum repetitive peak reverse voltage		V_{RRM}	100	V
Maximum average forward rectified current (fig. 1)	per device	$I_{F(AV)}$ (1)	10	A
	per diode		5	
Peak forward surge current 8.3 ms single half sine-wave superimposed on rated load		I_{FSM}	80	A
Operating junction temperature range		T_J (2)	-40 to +175	°C
Storage temperature range		T_{STG}	-55 to +175	

Notes

(1) Mounted on infinite heatsink

(2) The heat generated must be less than the thermal conductivity from junction-to-ambient: $dP_D/dT_J < 1/R_{\theta JA}$

For technical questions within your region: DiodesAmericas@vishay.com, DiodesAsia@vishay.com, DiodesEurope@vishay.com

THIS DOCUMENT IS SUBJECT TO CHANGE WITHOUT NOTICE. THE PRODUCTS DESCRIBED HEREIN AND THIS DOCUMENT ARE SUBJECT TO SPECIFIC DISCLAIMERS, SET FORTH AT www.vishay.com/doc?91000

ELECTRICAL CHARACTERISTICS (T_A = 25 °C unless otherwise noted)						
PARAMETER	**TEST CONDITIONS**		**SYMBOL**	**TYP.**	**MAX.**	**UNIT**
Instantaneous forward voltage per diode	I_F = 2.5 A	T_A = 25 °C	V_F (1)	0.58	-	V
	I_F = 5 A			0.71	0.79	
	I_F = 2.5 A	T_A = 125 °C		0.50	-	
	I_F = 5 A			0.62	0.70	
Reverse current at rated V_R per diode	V_R = 70 V	T_A = 25 °C	I_R (2)	0.01	-	mA
		T_A = 125 °C		0.70	-	
	V_R = 100 V	T_A = 25 °C		-	0.1	
		T_A = 125 °C		1.4	4.0	
Typical junction capacitance	4.0 V, 1 MHz		C_J	480	-	pF

Notes

(1) Pulse test: 300 µs pulse width, 1 % duty cycle

(2) Pulse test: Pulse width ≤ 5 ms

THERMAL CHARACTERISTICS (T_A = 25 °C unless otherwise noted)			
PARAMETER	**SYMBOL**	**V10DM100C**	**UNIT**
Typical thermal resistance per device	$R_{\theta JC}$ (1)	2.5	°C/W
	$R_{\theta JA}$ (2)(3)	58	

Notes

(1) Mounted on infinite heatsink

(2) The heat generated must be less than the thermal conductivity from junction-to-ambient: $dP_D/dT_J < 1/R_{\theta JA}$ - junction-to-ambient

(3) Free air, without heatsink

ORDERING INFORMATION (Example)				
PREFERRED P/N	**UNIT WEIGHT (g)**	**PACKAGE CODE**	**BASE QUANTITY**	**DELIVERY MODE**
V10DM100C-M3/I	0.55	I	2000/reel	13" diameter plastic tape and reel
V10DM100CHM3/I (1)	0.55	I	2000/reel	13" diameter plastic tape and reel

Note

(1) AEC-Q101 qualified

For technical questions within your region: DiodesAmericas@vishay.com, DiodesAsia@vishay.com, DiodesEurope@vishay.com
THIS DOCUMENT IS SUBJECT TO CHANGE WITHOUT NOTICE. THE PRODUCTS DESCRIBED HEREIN AND THIS DOCUMENT ARE SUBJECT TO SPECIFIC DISCLAIMERS, SET FORTH AT www.vishay.com/doc?91000

RATINGS AND CHARACTERISTICS CURVES (T_A = 25 °C unless otherwise noted)

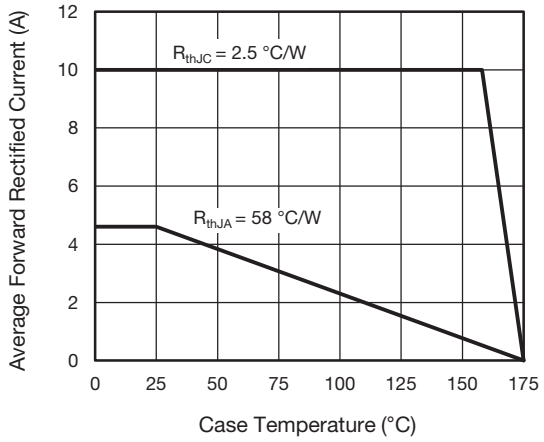

Fig. 1 - Maximum Forward Current Derating Curve

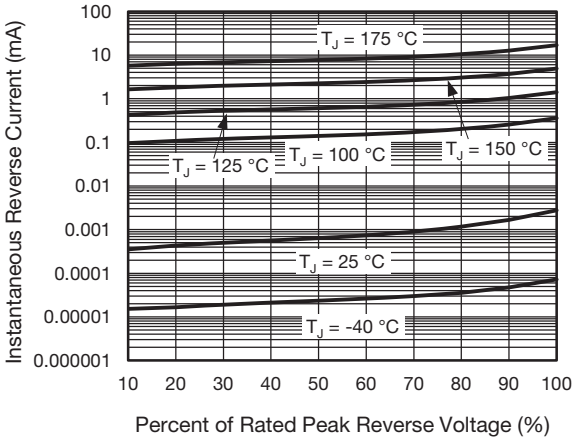

Fig. 4 - Typical Reverse Leakage Characteristics

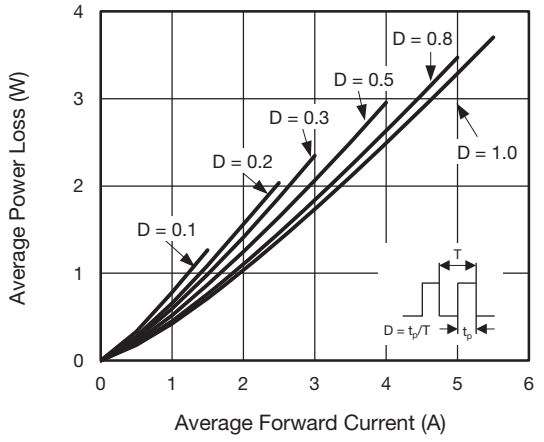

Fig. 2 - Average Power Loss Characteristics

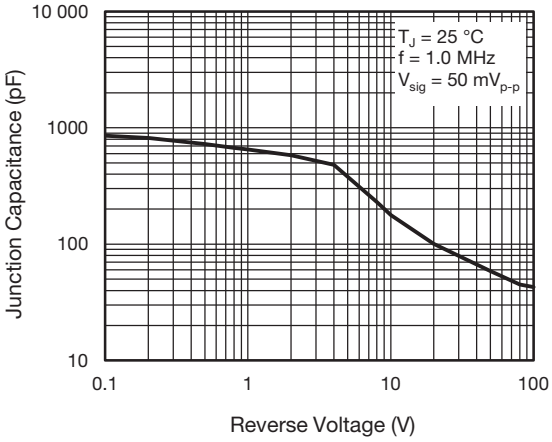

Fig. 5 - Typical Junction Capacitance

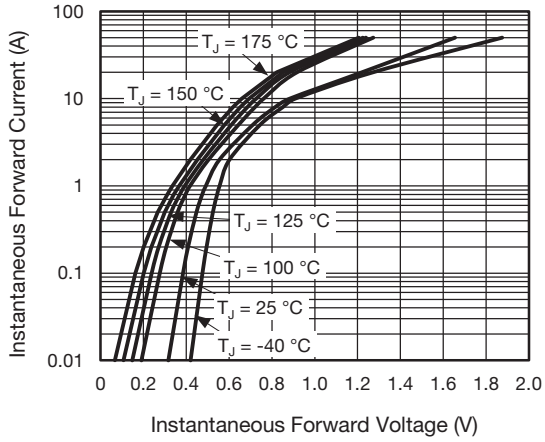

Fig. 3 - Typical Instantaneous Forward Characteristics

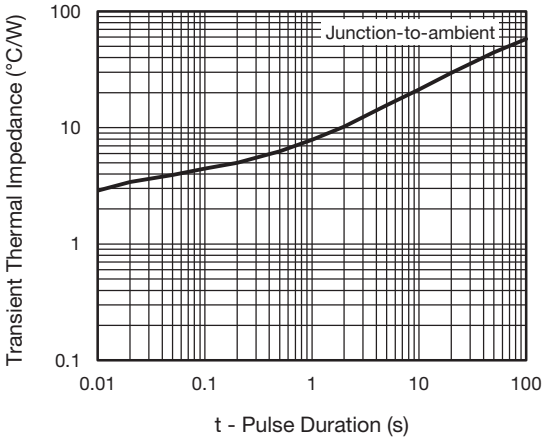

Fig. 6 - Typical Transient Thermal Impedance

For technical questions within your region: DiodesAmericas@vishay.com, DiodesAsia@vishay.com, DiodesEurope@vishay.com
THIS DOCUMENT IS SUBJECT TO CHANGE WITHOUT NOTICE. THE PRODUCTS DESCRIBED HEREIN AND THIS DOCUMENT ARE SUBJECT TO SPECIFIC DISCLAIMERS, SET FORTH AT www.vishay.com/doc?91000

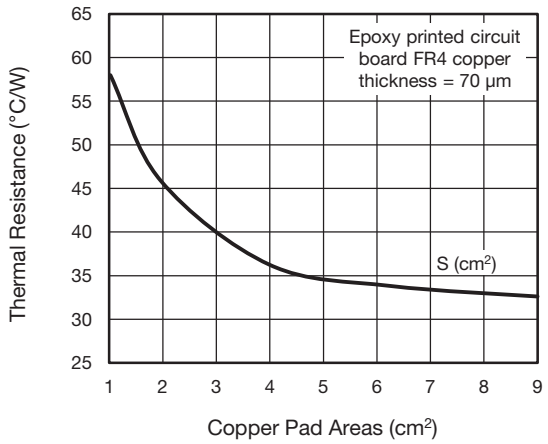

Fig. 7 - Thermal Resistance Junction-to-Ambient vs. Copper Pad Areas

PACKAGE OUTLINE DIMENSIONS in inches (millimeters)

SMPD (TO-263AC)

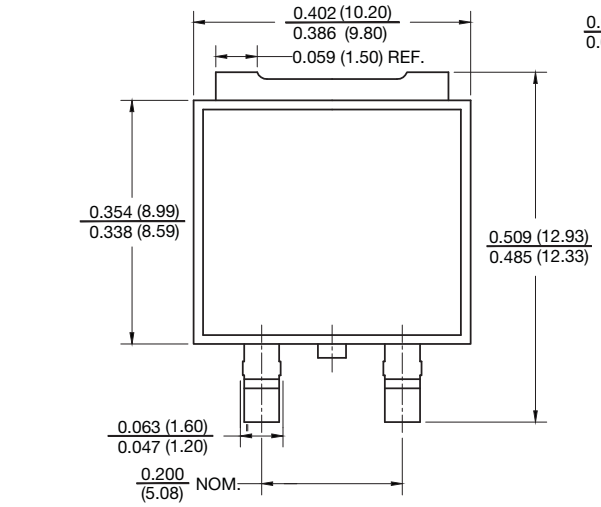

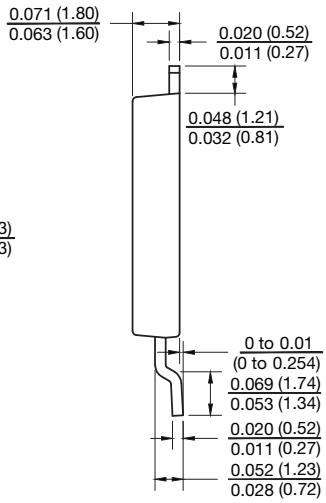

Mounting Pad Layout

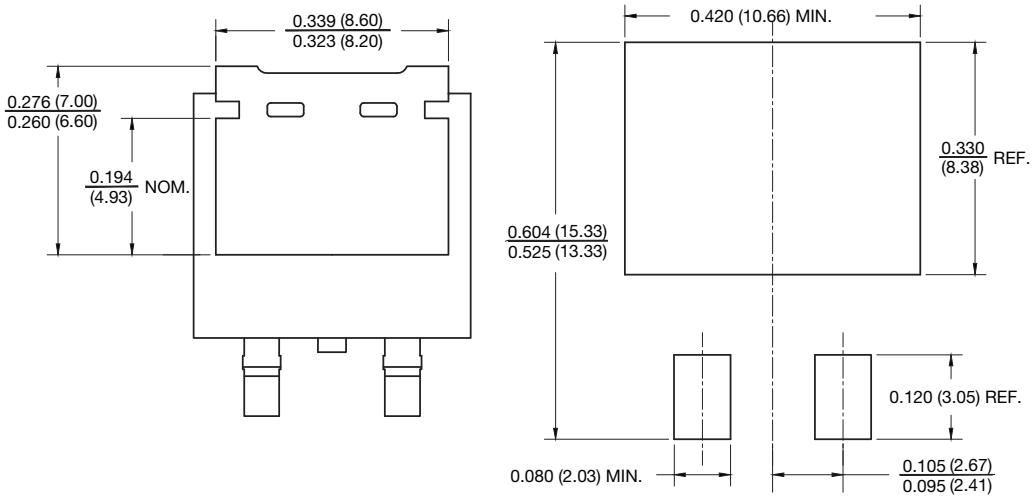

For technical questions within your region: DiodesAmericas@vishay.com, DiodesAsia@vishay.com, DiodesEurope@vishay.com
THIS DOCUMENT IS SUBJECT TO CHANGE WITHOUT NOTICE. THE PRODUCTS DESCRIBED HEREIN AND THIS DOCUMENT ARE SUBJECT TO SPECIFIC DISCLAIMERS, SET FORTH AT www.vishay.com/doc?91000

Disclaimer

ALL PRODUCT, PRODUCT SPECIFICATIONS AND DATA ARE SUBJECT TO CHANGE WITHOUT NOTICE TO IMPROVE RELIABILITY, FUNCTION OR DESIGN OR OTHERWISE.

Vishay Intertechnology, Inc., its affiliates, agents, and employees, and all persons acting on its or their behalf (collectively, “Vishay”), disclaim any and all liability for any errors, inaccuracies or incompleteness contained in any datasheet or in any other disclosure relating to any product.

Vishay makes no warranty, representation or guarantee regarding the suitability of the products for any particular purpose or the continuing production of any product. To the maximum extent permitted by applicable law, Vishay disclaims (i) any and all liability arising out of the application or use of any product, (ii) any and all liability, including without limitation special, consequential or incidental damages, and (iii) any and all implied warranties, including warranties of fitness for particular purpose, non-infringement and merchantability.

Statements regarding the suitability of products for certain types of applications are based on Vishay’s knowledge of typical requirements that are often placed on Vishay products in generic applications. Such statements are not binding statements about the suitability of products for a particular application. It is the customer’s responsibility to validate that a particular product with the properties described in the product specification is suitable for use in a particular application. Parameters provided in datasheets and / or specifications may vary in different applications and performance may vary over time. All operating parameters, including typical parameters, must be validated for each customer application by the customer’s technical experts. Product specifications do not expand or otherwise modify Vishay’s terms and conditions of purchase, including but not limited to the warranty expressed therein.

Except as expressly indicated in writing, Vishay products are not designed for use in medical, life-saving, or life-sustaining applications or for any other application in which the failure of the Vishay product could result in personal injury or death. Customers using or selling Vishay products not expressly indicated for use in such applications do so at their own risk. Please contact authorized Vishay personnel to obtain written terms and conditions regarding products designed for such applications.

No license, express or implied, by estoppel or otherwise, to any intellectual property rights is granted by this document or by any conduct of Vishay. Product names and markings noted herein may be trademarks of their respective owners.

© 2021 VISHAY INTERTECHNOLOGY, INC. ALL RIGHTS RESERVED