THIS COPY IS PROVIDED ON A RESTRICTED BASIS AND IS NOT TO BE USED IN ANY WAY DETRIMENTAL TO THE INTERESTS OF PANDUIT CORP.

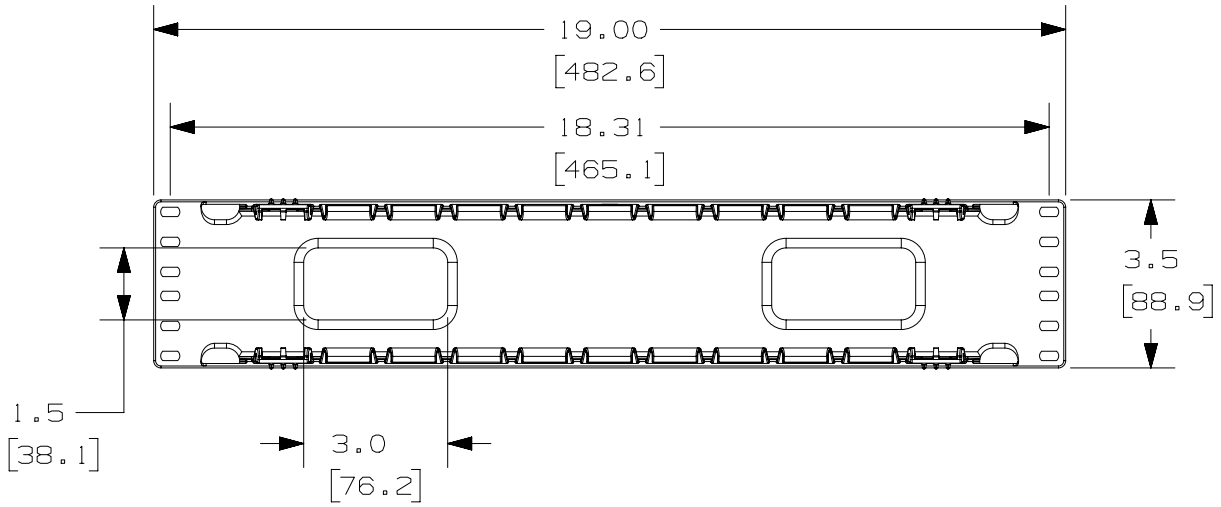

PANDUIT P/N	WEIGHT
WMPF1E	1.2 LBS/EACH 544 g/EACH

NOTES:
1. DESIGNED FOR MOUNTING ON 19" EIA RACKS.
2. COMPONENTS:
   1- MANAGER
   1- 17" X 3.6" DUAL HINGED COVER
   4- #12-24 x 1/2" SCREWS
3. DIMENSIONS IN PARENTHESES ARE METRIC.

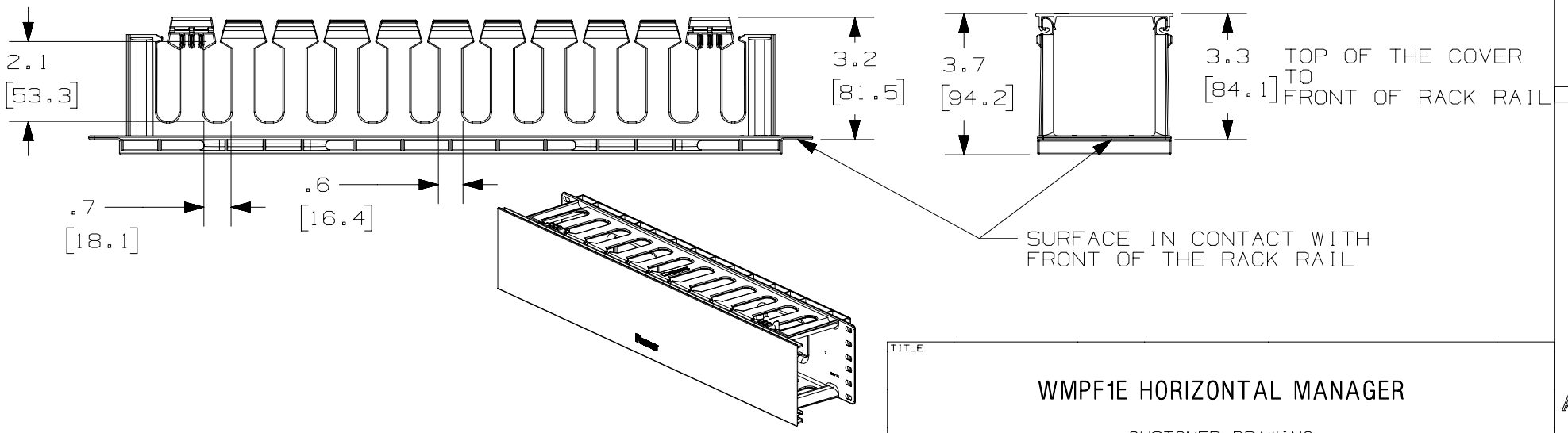

REV	DATE	BY	CHK	APR	DESCRIPTION	ECN
08A	11-29-17	TWV	JEFK	JEFK	REMOVED PART NUMBER WMPF1E-X	V10101AB-DC
07A	3-26-15	TWV	MACA	KRKE	BOM ADJUSTMENT; REVISED NOTES.	V10101AB-DC
06F	4-22-13	BAME	RYB	CMK	REVISED AND REDRAWN; ALL PREVIOUS REVS OMITTED REVISED TITLE BLOCK	V10101AB-DC

TITLE

WMPF1E HORIZONTAL MANAGER

CUSTOMER DRAWING

ITEM REVISION NAME: V10101AB/08

DATASET FILE NAME: V10101AB_DC/08A

UNLESS OTHERWISE SPECIFIED, DIMENSIONAL TOLERANCES ARE: IN [mm]

.X ± .XXX ±

.XX ± ANGLES ±

THIRD ANGLE PROJECTION

MATERIAL: ABS

DRAWING NUMBER: V10101AB-DC

DRAWN BY	DATE	CHK	SCALE	SIZE
JDWE	12-17-02	MECA	NONE	A

SHT 1 OF 1

D10100DA/15