

Connection cable

V1-W-2M-PVC-V1-W

- Degree of protection IP67 / IP68 / IP69
- Knurled nut suitable for tool assembly
- Immunity to vibration, with mechanical latching

Cordset M12 socket angled to M12 plug angled A-coded, 4-pin, PVC cable grey

Dimensions

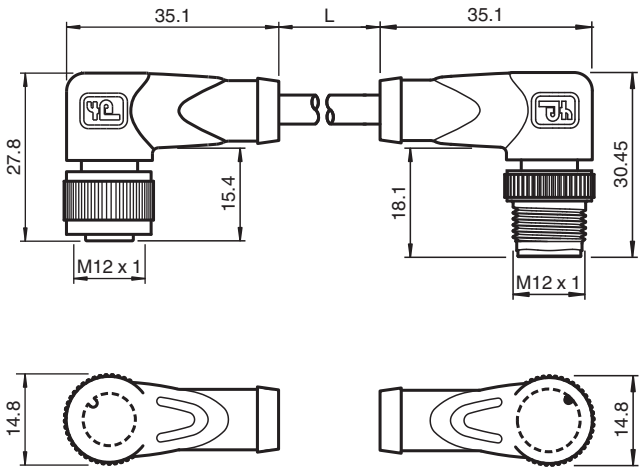

Technical Data

General specifications		
Connector 1		
Connection		socket
Construction type		M12
Style		angled
Locking		screw connection
Number of pins		4
Coding		A-coded
Connector 2		
Connection		plug
Construction type		M12
Style		angled
Locking		screw connection
Number of pins		4
Coding		A-coded
Electrical specifications		
Operating voltage	U_B	max. 250 V AC/DC

Release date: 2021-04-05 Date of issue: 2021-04-05 Filename: 240929_eng.pdf

Technical Data

Operating current	I_B	max. 4 A
Conformity		
Degree of protection		EN 60529
Plug connection		connector M12 x 1 : IEC 61076-2-101
Flammability		IEC 60332-2-2
Ambient conditions		
Ambient temperature		
Plug connector		-40 ... 90 °C (-40 ... 194 °F)
Cable, fixed		-25 ... 70 °C (-13 ... 158 °F)
Cable, flexing		-5 ... 70 °C (23 ... 158 °F)
Pollution degree		3
Mechanical specifications		
Plug connector		
Tightening torque		0.6 Nm
Loosening protection		available
Tool installation		straight knurling
Mating cycles		min. 100
Degree of protection		IP67 / IP68 / IP69
Cable		according to IEC/EN 60228 (DIN VDE 0295) class 5
Sheath diameter		4.8 mm
Bending radius		> 10 x cable diameter, moving
Sheath stripping force		max. 80 N / 300 mm
Sheath color		grey (similar to RAL 7001)
Number of cores		4
Core cross-section		0.34 mm²
Cores color		Core 1: brown Core 2: white Core 3: blue Core 4: black
Core construction		19 x 0.15 mm Ø
Length	L	2 m
Cable code		Li Y YM 4 x 0,34
Material		
Plug connector		
Screw connection		Zinc diecast, nickel-plated
Body		TPU, black
Contact surface		Au
Flammability		V-2
Cable		
Sheathing		PVC
Core insulation		PVC
Flammability		flame-resistant

Connection Assignment

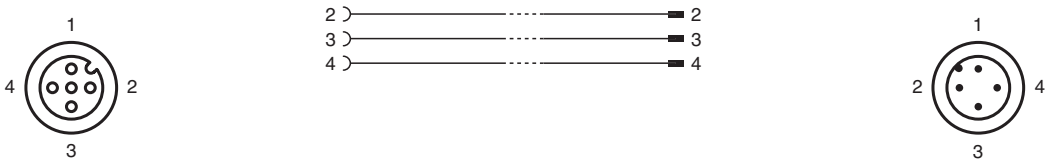

Release date: 2021-04-05 Date of issue: 2021-04-05 Filename: 240929_eng.pdf

Accessories

	**MH V1-SCREWDRIVER**	torque screwdriver (0.6 Nm)
	**MH V1-BIT M12**	plug-in cap M12
	**V1/V3-LABELHOLDER**	Label holder
	**V1/V3-LABEL**	Label plate
	**MH V1-Holder**	Modular universal holder for M12 connectors
	**V1-CLIP**	Unlocking protector for M12 connector
	**V1-MARKING-RING-COLOR**	Marking rings for M12 connectors, various colors

Release date: 2021-04-05 Date of issue: 2021-04-05 Filename: 240929_eng.pdf