UT54ACTS245E

Octal Bus Transceiver with Three-State Outputs
July 20013
www.aeroflex.com/Logic
Datasheet

FEATURES

- Three-state outputs drive bus line directly
- 0.6µm CRH CMOS process
  - Latchup immune
- High speed
- Low power consumption
- Wide power supply operating range of 3.0V to 5.5V
- Available QML Q or V processes
- Flexible package
  - 20-lead flatpack
- UT54ACTS245E-SMD-5962-96573

DESCRIPTION

The UT54ACTS245E is a non-inverting octal bus transceiver designed for asynchronous two-way communication between data buses. The control function implementation minimizes external timing requirements.

The device allows data transmission from the A bus to the B bus or from the B bus to the A bus depending upon the logic level at the direction control (DIR) input. The enable input ($\overline{G}$) disables the device so that the buses are effectively isolated.

The device is characterized over full HiRel temperature range of -55°C to +125°C.

FUNCTION TABLE

ENABLE $\overline{G}$	DIRECTION CONTROL DIR	OPERATION
L	L	B Data To A Bus
L	H	A Data To B Bus
H	X	Isolation

PINOUTS

20-Lead Flatpack
Top View

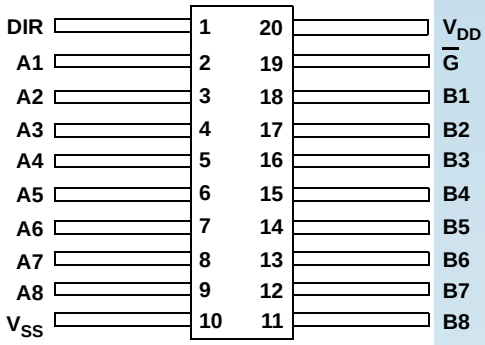

LOGIC SYMBOL

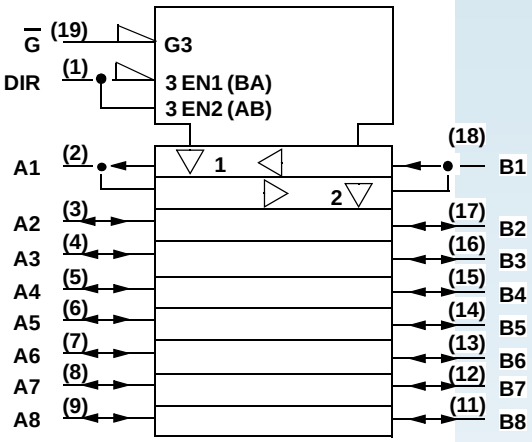

Note:
1. Logic symbol in accordance with ANSI/IEEE Std 91-1984 and IEC Publication 617-12.

LOGIC DIAGRAM

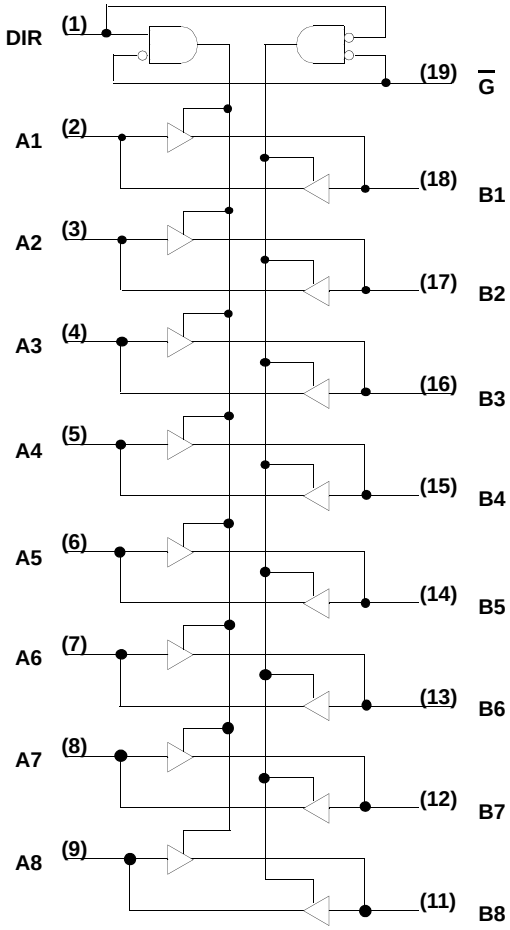

OPERATIONAL ENVIRONMENT[1]

PARAMETER	LIMIT	UNITS
Total Dose	1.0E6	rads(Si)
SEU Threshold [2]	108	MeV-cm^2/mg
SEL Threshold	120	MeV-cm^2/mg
Neutron Fluence	1.0E14	n/cm^2

Notes:
1. Logic will not latchup during radiation exposure within the limits defined in the table.
2. Device storage elements are immune to SEU affects.

ABSOLUTE MAXIMUM RATINGS

SYMBOL	PARAMETER	LIMIT	UNITS
V_{DD}	Supply voltage	-0.3 to 7.0	V
$V_{I/O}$	Voltage any pin	-.3 to V_{DD} +.3	V
T_{STG}	Storage Temperature range	-65 to +150	°C
T_J	Maximum junction temperature	+175	°C
T_{LS}	Lead temperature (soldering 5 seconds)	+300	°C
Θ_{JC}	Thermal resistance junction to case	15	°C/W
I_I	DC input current	±10	mA
P_D[2]	Maximum package power dissipation permitted @ Tc = +125°C	3.3	W

Note:
1. Stresses outside the listed absolute maximum ratings may cause permanent damage to the device. This is a stress rating only, functional operation of the device at these or any other conditions beyond limits indicated in the operational sections is not recommended. Exposure to absolute maximum rating conditions for extended periods may affect device reliability.
2. Per MIL-STD-883, method 1012.1, section 3.4.1, PD=(Tj(max) - Tc(max)) / Θjc

RECOMMENDED OPERATING CONDITIONS

SYMBOL	PARAMETER	LIMIT	UNITS
V_{DD}	Supply voltage	3.0 to 5.5	V
V_{IN}	Input voltage any pin	0 to V_{DD}	V
T_C	Temperature range	-55 to +125	°C

DC ELECTRICAL CHARACTERISTICS FOR THE UT54ACTS245E[7]

(V_{DD} = 3.0V to 5.5V; V_{SS} = 0V[6]; -55°C < T_C < +125°C)

SYMBOL	DESCRIPTION	CONDITION	MIN	MAX	UNIT
V_{IL1}	Low-level input voltage [1]	V_{DD} from 4.5V to 5.5V		0.8	V
V_{IL2}	Low-level input voltage [1]	V_{DD} from 3.0V to 3.6V		0.8	V
V_{IH1}	High-level input voltage [1]	V_{DD} from 4.5V to 5.5V	0.5 V_{DD}		V
V_{IH2}	High-level input voltage [1]	V_{DD} from 3.0V to 3.6V	2.0		V
I_{IN}	Input leakage current	V_{IN} = V_{DD} or V_{SS}	-1	1	µA
V_{OL1}	Low-level output voltage [3]	I_{OL} = 12mA V_{DD} = 4.5V to 5.5V		0.4	V
V_{OL2}	Low-level output voltage [3]	I_{OL} = 8mA V_{DD} = 3.0V to 3.6V		0.4	V
V_{OH1}	High-level output voltage [3]	I_{OH} = -12mA V_{DD} from 4.5V to 5.5V	0.7 V_{DD}		V
V_{OH2}	High-level output voltage [3]	I_{OH} = -8mA V_{DD} from 3.0V to 3.6V	2.4		V
I_{OS1}	Short-circuit output current [2,4]	V_O = V_{DD} and V_{SS} V_{DD} from 4.5V to 5.5V	-300	300	mA
I_{OS2}	Short-circuit output current [2,4]	V_O = V_{DD} and V_{SS} V_{DD} from 3.0V to 3.6V	-200	200	mA
I_{OL1}	Low level output current [9]	V_{IN} = V_{DD} or V_{SS} V_{OL} = 0.4V V_{DD} from 4.5V to 5.5V	12		mA
I_{OL2}	Low level output current [9]	V_{IN} = V_{DD} or V_{SS} V_{OL} = 0.4V V_{DD} from 3.0V to 3.6V	8		mA
I_{OH1}	High level output current [9]	V_{IN} = V_{DD} or V_{SS} V_{OH} = V_{DD}-0.4V V_{DD} from 4.5V to 5.5V	-12		mA
I_{OH2}	High level output current [9]	V_{IN} = V_{DD} or V_{SS} V_{OH} = V_{DD}-0.4V V_{DD} from 3.0V to 3.6V	-8		mA

I_{OZH}	Three-state output leakage current, high	$\overline{G}$ = 5.5V; for all other inputs $V_{IN} = V_{DD}$ or $V_{SS;}$ $V_{OUT} = V_{DD}$ V_{DD} = 5.5V		30	µA
I_{OZL}	Three-state output leakage current, low	$\overline{G}$ = 5.5V; for all other inputs $V_{IN} = V_{DD}$ or $V_{SS;}$ $V_{OUT} = V_{SS}$ V_{DD} = 5.5V		-30	µA
P_{total1}	Power dissipation [2, 8]	C_L = 50pF V_{DD} = 4.5V to 5.5V		1.5	mW/ MH_Z
P_{total2}	Power dissipation [2, 8]	C_L = 50pF V_{DD} = 3.0V to 3.6V		.75	mW/ MH_Z
I_{DDQ}	Quiescent Supply Current	$V_{IN} = V_{DD}$ or V_{SS} V_{DD} from 3.0V to 5.5V		10	µA
ΔI_{DDQ}	Quiescent Supply Current Delta	For input under test $V_{IN} = V_{DD}$ -2.1V For all other inputs $V_{IN} = V_{DD}$ or V_{SS} V_{DD} = 5.5V		1.6	mA
C_{IN}	Input capacitance [5]	f = 1MHz, V_{DD} = 0V		15	pF
C_{OUT}	Output capacitance [5]	f = 1MHz, V_{DD} = 0V		15	pF

Notes:

1. Functional tests are conducted in accordance with MIL-STD-883 with the following input test conditions: $V_{IH} = V_{IH}(min) + 20\%, - 0\%$; $V_{IL} = V_{IL}(max) + 0\%, - 50\%$, as specified herein, for TTL, CMOS, or Schmitt compatible inputs. Devices may be tested using any input voltage within the above specified range, but are guaranteed to $V_{IH}(min)$ and $V_{IL}(max)$.
2. Supplied as a design limit but not guaranteed or tested.
3. Per MIL-PRF-38535, for current density ≤ 5.0E5 amps/cm^2, the maximum product of load capacitance (per output buffer) times frequency should not exceed 3,765 pF/MHz.
4. Not more than one output may be shorted at a time for maximum duration of one second.
5. Capacitance measured for initial qualification and when design changes may affect the value. Capacitance is measured between the designated terminal and V_{SS} at frequency of 1MHz and a signal amplitude of 50mV rms maximum.
6. Maximum allowable relative shift equals 50mV.
7. All specifications valid for the maximum radiation dose available for the respective device types.
8. Power does not include power contribution of any TTL output sink current.
9. Guaranteed by characterization, but not tested.

AC ELECTRICAL CHARACTERISTICS FOR UT54ACTS245[2]

(V_{DD} = 3.0V to 5.5V; V_{SS} = 0V [1], -55°C < T_C < +125°C)

SYMBOL	PARAMETER	CONDITION	V_{DD}	MINIMUM	MAXIMUM	UNIT
t_{PHL1}	Data to bus	C_L = 50pF	3.0V to 3.6V	3	23	ns
			4.5V to 5.5V	2	13	
t_{PLH2}	Data to bus	C_L = 50pF	3.0V to 3.6V	2	18	ns
			4.5V to 5.5V	1	11	
t_{PZH1}	$\overline{G}$ low to bus active	C_L = 50pF	3.0V to 3.6V	2	15	ns
			4.5V to 5.5V	2	10	
t_{PZL2}	$\overline{G}$ low to bus active	C_L = 50pF	3.0V to 3.6V	2	14	ns
			4.5V to 5.5V	2	9	
t_{PHZ3}	$\overline{G}$ high to bus three-state	C_L = 50pF	3.0V to 3.6V	3	16	ns
			4.5V to 5.5V	3	12	
t_{PLZ3}	$\overline{G}$ high to bus three-state	C_L = 50pF	3.0V to 3.6V	2	10	ns
			4.5V to 5.5V	2	9	

Notes:
1. Maximum allowable relative shift equals 50mV.
2. All specifications valid for the maximum radiation dose available for the respective device types.

Packaging

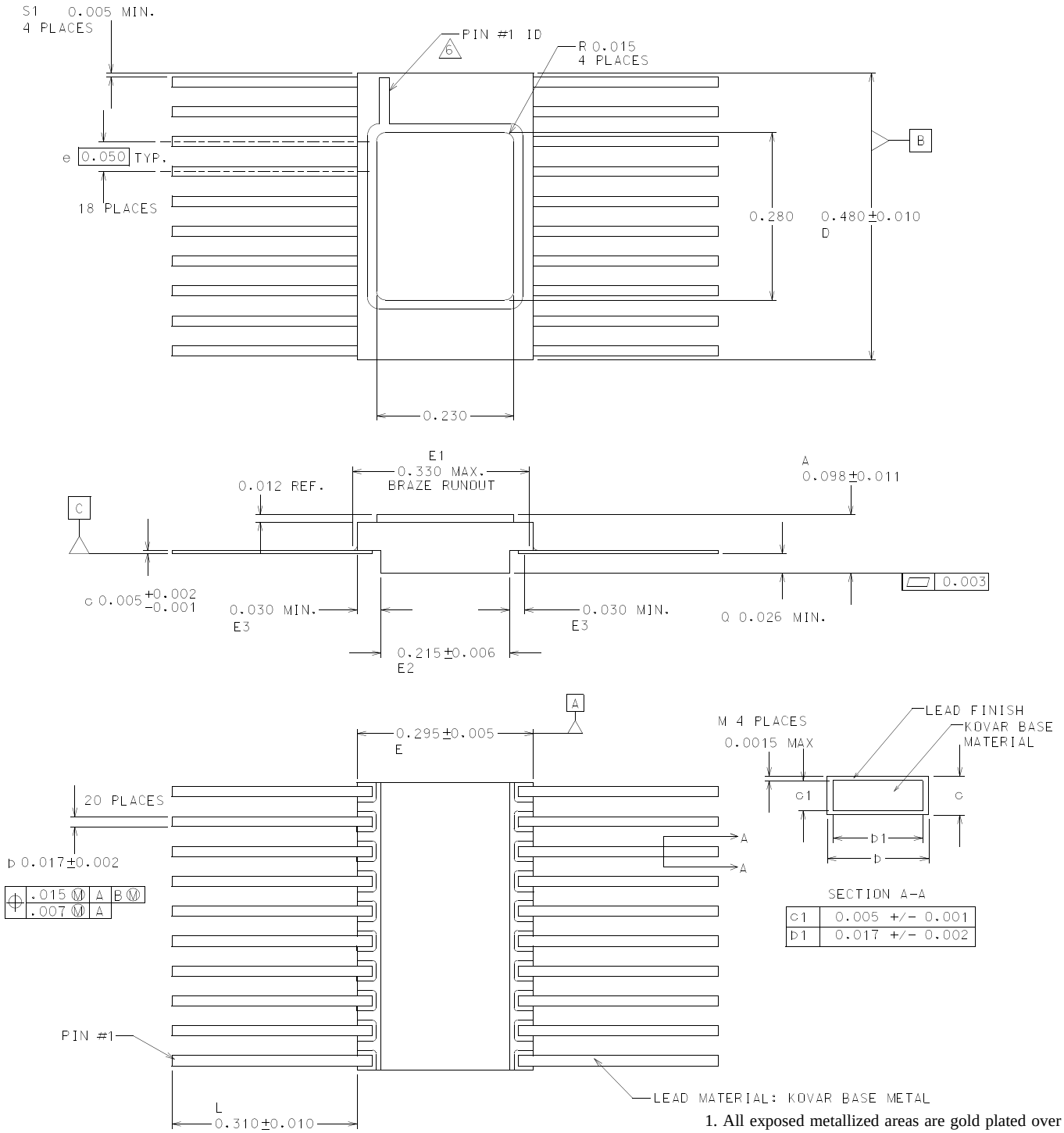

1. All exposed metallized areas are gold plated over electroplated nickel per MIL-PRF-38535.
2. The lid is electrically connected to V_{SS}.
3. Lead finishes are in accordance with MIL-PRF-38535.
4. Dimension symbol is in accordance with MIL-PRF-38533.
5. Lead position and colanarity are not measured.

Figure 1. 20-lead Flatpack

Ordering Information: UT54ACTS245E: SMD

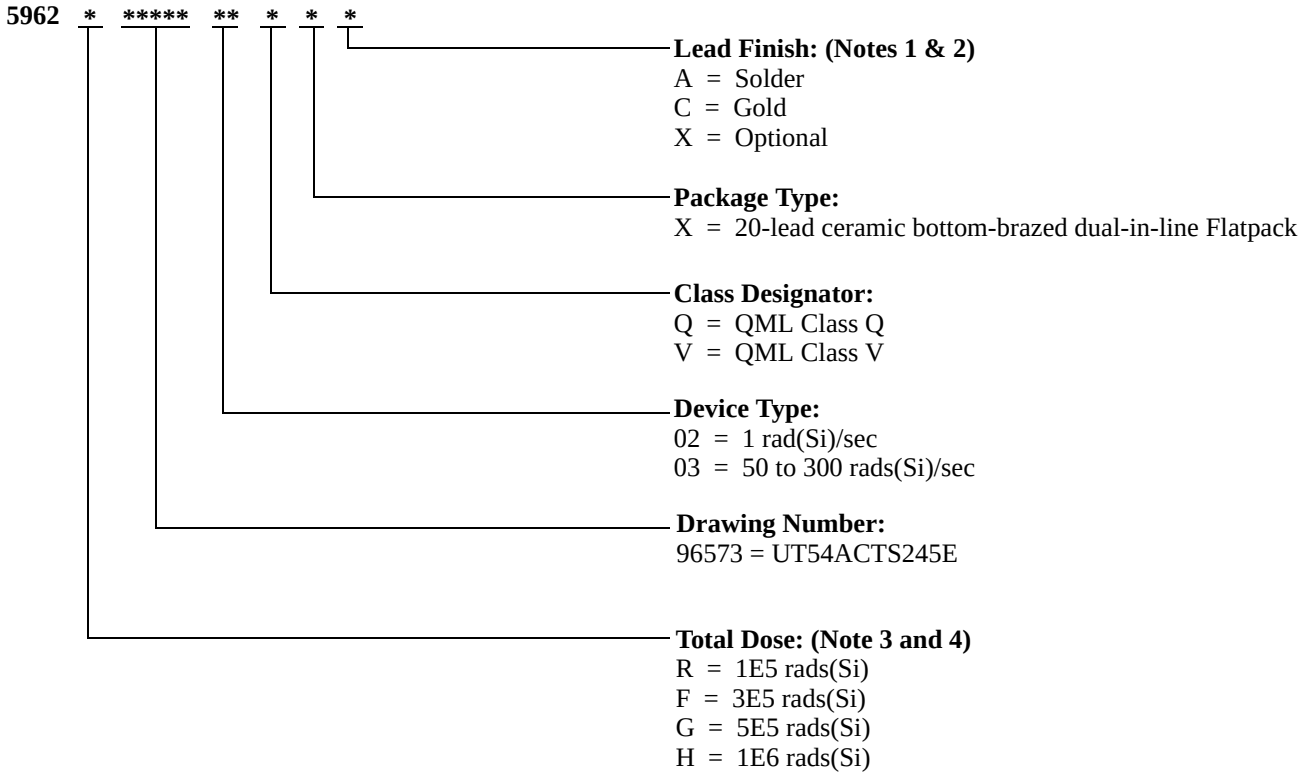

Notes:

1. Lead finish (A,C, or X) must be specified.
2. If an "X" is specified when ordering, part marking will match the lead finish and will be either "A" (solder) or "C" (gold).
3. Total dose radiation must be specified when ordering. QML Q and QML V not available without radiation hardening. For prototype inquiries, contact factory.
4. Device type 02 is only offered with a TID tolerance guarantee of 3E5 rads(Si) or 1E6 rads(Si) and is tested in accordance with MIL-STD-883 Test Method 1019 Condition A and section 3.11.2. Device type 03 is only offered with a TID tolerance guarantee of 1E5 rads(Si), 3E5 rads(Si), and 5E5 rads(Si), and is tested in accordance with MIL-STD-883 Test Method 1019 Condition A.

Aeroflex Colordo Springs - Datasheet Definition

Advanced Datasheet - Product In Development

Preliminary Datasheet - Shipping Prototype

Datasheet - Shipping QML & Reduced HiRel

COLORADO
Toll Free: 800-645-8862
Fax: 719-594-8468

INTERNATIONAL
Tel: 805-778-9229
Fax: 805-778-1980

NORTHEAST
Tel: 603-888-3975
Fax: 603-888-4585

SE AND MID-ATLANTIC
Tel: 321-951-4164
Fax: 321-951-4254

WEST COAST
Tel: 949-362-2260
Fax: 949-362-2266

CENTRAL
Tel: 719-594-8017
Fax: 719-594-8468

www.aeroflex.com info-ams@aeroflex.com

AEROFLEX
A passion for performance.

Aeroflex Colorado Springs (Aeroflex) reserves the right to make changes to any products and services herein at any time without notice. Consult Aeroflex or an authorized sales representative to verify that the information in this data sheet is current before using this product. Aeroflex does not assume any responsibility or liability arising out of the application or use of any product or service described herein, except as expressly agreed to in writing by Aeroflex; nor does the purchase, lease, or use of a product or service from Aeroflex convey a license under any patent rights, copyrights, trademark rights, or any other of the intellectual rights of Aeroflex or of third parties.

Our passion for performance is defined by three attributes represented by these three icons: solution-minded, performance-driven and customer-focused