USB3316

Hi-Speed USB Transceiver with 1.8V ULPI Interface - 19.2MHz Reference Clock

PRODUCT FEATURES

Data Brief

- USB-IF “Hi-Speed” compliant to the Universal Serial Bus Specification Rev 2.0
- Interface compliant with the ULPI Specification revision 1.1 as a Single Data Rate (SDR) PHY
- 1.8V IO Voltage (±10%)
- flexPWR® Technology
  - Low current design ideal for battery powered applications
  - “Sleep” mode tri-states all ULPI pins and places the part in a low current state
- Supports FS pre-amble for FS hubs with a LS device attached (UTMI+ Level 3)
- Supports HS SOF and LS keep-alive pulse
- Includes full support for the optional On-The-Go (OTG) protocol detailed in the On-The-Go Supplement Revision 1.0a specification
- Supports the OTG Host Negotiation Protocol (HNP) and Session Request Protocol (SRP)
- Allows host to turn VBUS off to conserve battery power in OTG applications
- Support OTG monitoring of VBUS levels with internal comparators
- “Wrapper-less” design for optimal timing performance and design ease
  - Low Latency Hi-Speed Receiver (43 Hi-Speed clocks Max) allows use of legacy UTMI Links with a ULPI bridge
- Internal 5V cable short-circuit protection of ID, DP and DM lines to VBUS or ground
- 19.2MHz Reference Clock Operation
  - 0 to 3.6V input drive tolerant
  - Able to accept “noisy” clock sources
- Internal low jitter PLL for 480MHz Hi-Speed USB operation
- Internal detection of the value of resistance to ground on the ID pin
- Integrated battery to 3.3V LDO regulator
  - 2.2uF bypass capacitor
  - 100mV dropout voltage
- Integrated ESD protection circuits
  - Up to ±15kV without any external devices
- Carkit UART mode for non-USB serial data transfers
- Integrated USB Switch
  - Allows single USB port of connection
  - High speed data
  - Battery charging
  - Stereo and mono/mic audio
  - USB1.1 data
- Industrial Operating Temperature -40°C to +85°C
- Packaging Options
  - 24 pin QFN lead-free RoHS compliant package (4 x 4 x 0.90 mm height)
  - 25 ball VFBGA lead-free RoHS compliant package also available; (3 x 3 x 0.88mm height)
  - 25 ball UFBGA lead-free RoHS compliant package also available; (3 x 3 x 0.61mm height)

Applications

The USB3316 is targeted for any application where a Hi-Speed USB connection is desired and when board space, power, and interface pins must be minimized.

The USB3316 is well suited for:

- Cell Phones
- PDAs
- MP3 Players
- GPS Personal Navigation
- Scanners
- External Hard Drives
- Digital Still and Video Cameras
- Portable Media Players
- Entertainment Devices
- Printers
- Set Top Boxes
- Video Record/Playback Systems
- IP and Video Phones
- Gaming Consoles
- POS Terminals

Order Number(s):

USB3316C-CP-TR FOR 24 PIN, QFN LEAD-FREE ROHS COMPLIANT PACKAGE (TAPE AND REEL)

USB3316C-GJ-TR FOR 25 PIN, VFBGA LEAD-FREE ROHS COMPLIANT PACKAGE (TAPE AND REEL)

USB3316C-GM-TR FOR 25 PIN, UFBGA LEAD-FREE ROHS COMPLIANT PACKAGE (TAPE AND REEL)

REEL SIZE IS 4000 PIECES.

This product meets the halogen maximum concentration values per IEC61249-2-21

For RoHS compliance and environmental information, please visit www.smsc.com/rohs

80 ARKAY DRIVE, HAUPPAUGE, NY 11788 (631) 435-6000, FAX (631) 273-3123

Copyright © 2010 SMSC or its subsidiaries. All rights reserved.

Circuit diagrams and other information relating to SMSC products are included as a means of illustrating typical applications. Consequently, complete information sufficient for construction purposes is not necessarily given. Although the information has been checked and is believed to be accurate, no responsibility is assumed for inaccuracies. SMSC reserves the right to make changes to specifications and product descriptions at any time without notice. Contact your local SMSC sales office to obtain the latest specifications before placing your product order. The provision of this information does not convey to the purchaser of the described semiconductor devices any licenses under any patent rights or other intellectual property rights of SMSC or others. All sales are expressly conditional on your agreement to the terms and conditions of the most recently dated version of SMSC's standard Terms of Sale Agreement dated before the date of your order (the "Terms of Sale Agreement"). The product may contain design defects or errors known as anomalies which may cause the product's functions to deviate from published specifications. Anomaly sheets are available upon request. SMSC products are not designed, intended, authorized or warranted for use in any life support or other application where product failure could cause or contribute to personal injury or severe property damage. Any and all such uses without prior written approval of an Officer of SMSC and further testing and/or modification will be fully at the risk of the customer. Copies of this document or other SMSC literature, as well as the Terms of Sale Agreement, may be obtained by visiting SMSC's website at http://www.smsc.com. SMSC is a registered trademark of Standard Microsystems Corporation ("SMSC"). Product names and company names are the trademarks of their respective holders.

SMSC DISCLAIMS AND EXCLUDES ANY AND ALL WARRANTIES, INCLUDING WITHOUT LIMITATION ANY AND ALL IMPLIED WARRANTIES OF MERCHANTABILITY, FITNESS FOR A PARTICULAR PURPOSE, TITLE, AND AGAINST INFRINGEMENT AND THE LIKE, AND ANY AND ALL WARRANTIES ARISING FROM ANY COURSE OF DEALING OR USAGE OF TRADE. IN NO EVENT SHALL SMSC BE LIABLE FOR ANY DIRECT, INCIDENTAL, INDIRECT, SPECIAL, PUNITIVE, OR CONSEQUENTIAL DAMAGES; OR FOR LOST DATA, PROFITS, SAVINGS OR REVENUES OF ANY KIND; REGARDLESS OF THE FORM OF ACTION, WHETHER BASED ON CONTRACT; TORT; NEGLIGENCE OF SMSC OR OTHERS; STRICT LIABILITY; BREACH OF WARRANTY; OR OTHERWISE; WHETHER OR NOT ANY REMEDY OF BUYER IS HELD TO HAVE FAILED OF ITS ESSENTIAL PURPOSE, AND WHETHER OR NOT SMSC HAS BEEN ADVISED OF THE POSSIBILITY OF SUCH DAMAGES.

General Description

The USB3316 is a highly integrated Hi-Speed USB 2.0 Transceiver (PHY) that supports systems architectures based on a 19.2MHz reference clock. It is designed to be used in both commercial and industrial temperature applications.

The USB3316 meets all of the electrical requirements to be used as a Hi-Speed USB Host, Device, or an On-the-Go (OTG) device. In addition to the supporting USB signaling the USB3316 also provides USB UART mode and USB Audio mode.

USB3316 uses the industry standard UTMI+ Low Pin Interface (ULPI) to connect the USB PHY to the Link. The industry standard ULPI interface uses a method of in-band signaling and status byte transfers between the Link and PHY, to facilitate a USB session. By using in-band signaling and status byte transfers the ULPI interface requires only 12 pins.

The USB3316 uses SMSC's "wrapper-less" technology to implement the ULPI interface. This "wrapper-less" technology allows the PHY to achieve a low latency transmit and receive time. SMSC's low latency transceiver allows an existing UTMI Link to be reused by adding a UTMI to ULPI bridge. By adding a bridge to the ASIC the existing and proven UTMI Link IP can be reused.

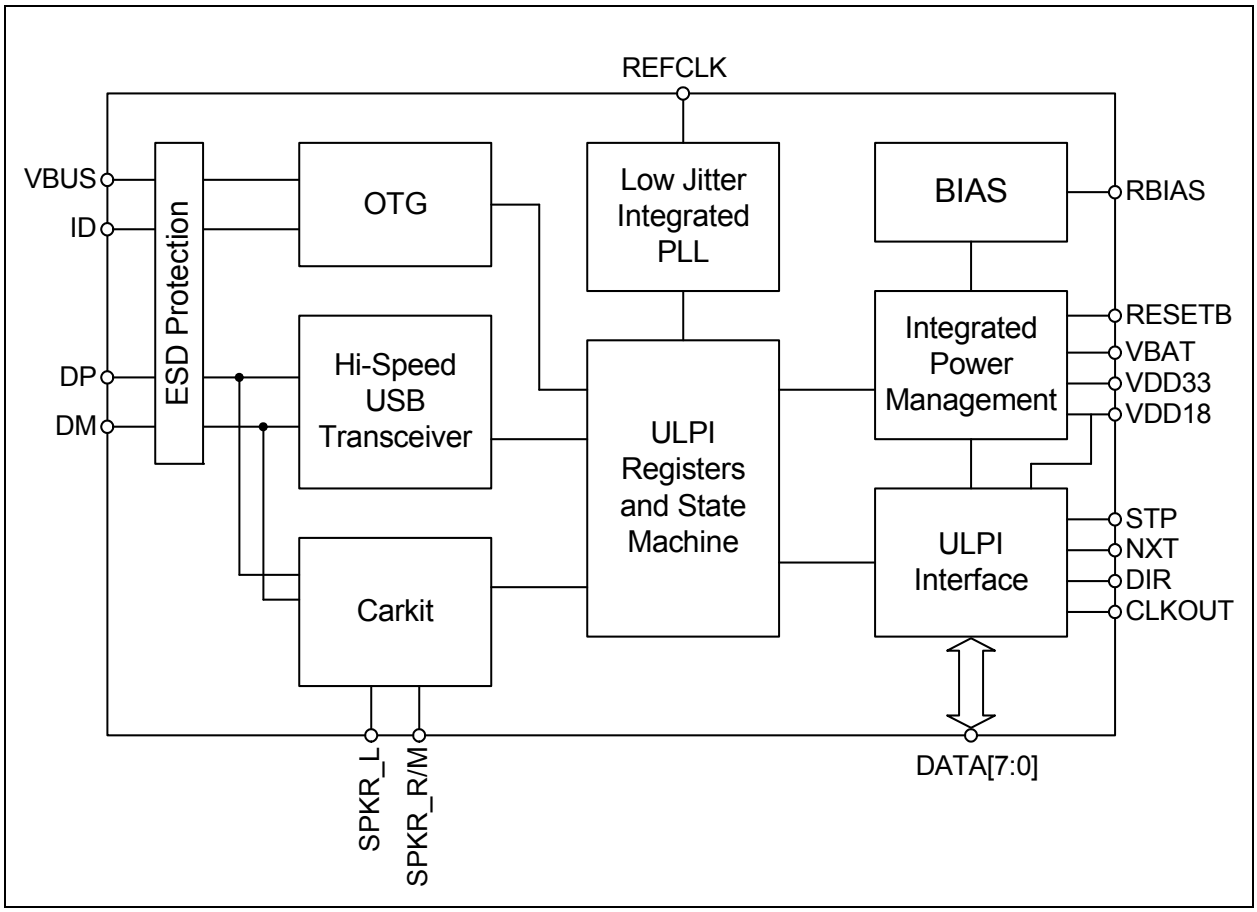

Figure 1 USB3316 Block Diagram

The USB3316 is designed to run with a 19.2MHz reference clock. By using a reference clock from the Link the USB3316 is able to remove the cost of a crystal reference from the design.

The USB3316 includes a integrated 3.3V LDO regulator to generate its own supply from power applied at the **VBAT** pin. The voltage on the **VBAT** pin can range from 3.1 to 5.5V. The regulator dropout voltage is less than 100mV which allows the PHY to continue USB signaling when the voltage on **VBAT** drops to 3.1V. The USB transceiver will continue to operate at lower voltages, although some parameters may be outside the limits of the USB specifications. If the user would like to provide a 3.3V supply to the USB3316, the **VBAT** and **VDD33** pins should be connected together.

The USB3316 also includes integrated pull-up resistors that can be used for detecting the attachment of a USB Charger. By sensing the attachment to a USB Charger, a product using the USB3316 can charge its battery at more than the 500mA allowed when charging from a USB Host.

The USB3316 also includes support for USB audio modes. The user can program the PHY into UART or audio mode while in synchronous mode.

In USB UART mode, the USB3316 **DP** and **DM** pins are redefined to enable pass-through of asynchronous serial data. The USB3316 can only enter UART mode when the user programs the part into this mode.

In USB audio mode, the **DP** pin is shorted to the **SPKR_R/M** pin with a switch. The **DM** pin is shorted to the **SPKR_L** pin. These switches are on when the **RESETB** pin of the USB3316 is asserted. Audio signals may be transferred over the USB cable. In addition to audio signals, the switches can also be used to connect Full Speed USB from another PHY onto the USB cable.

USB3316 Pin Locations and Descriptions

Package Diagram with Pin Locations

The pinout below is viewed from the top of the package.

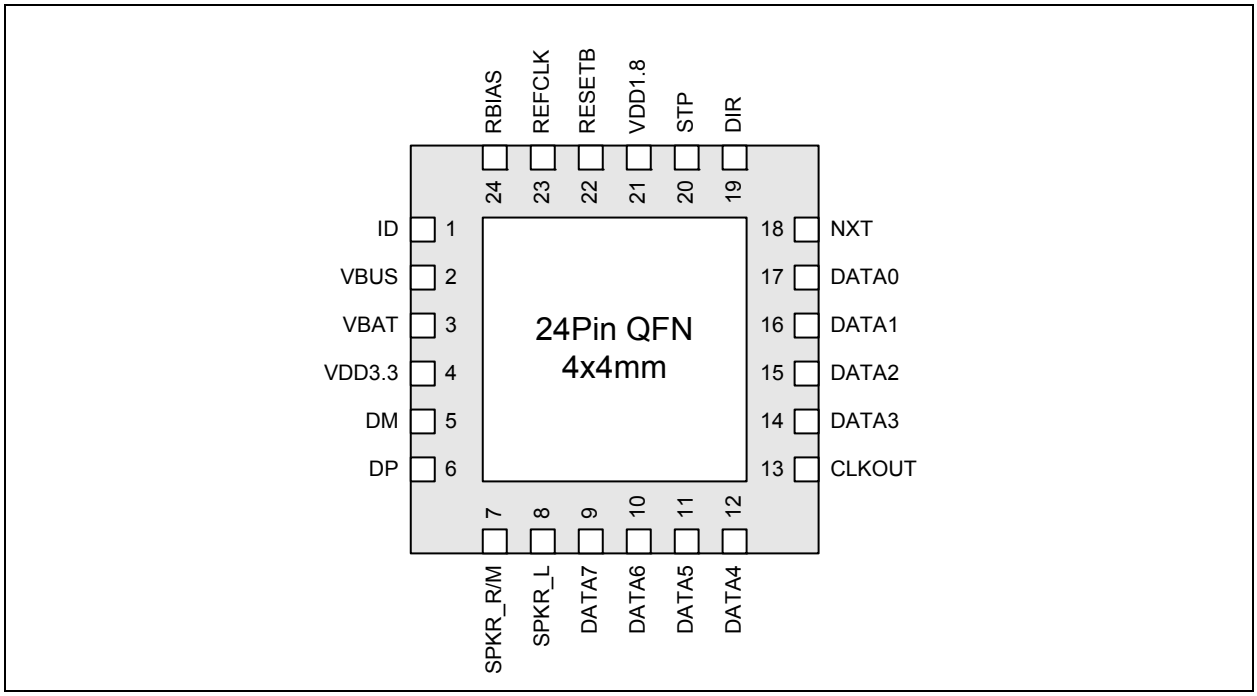

Figure 1.1 USB3316 QFN Pinout - Top View

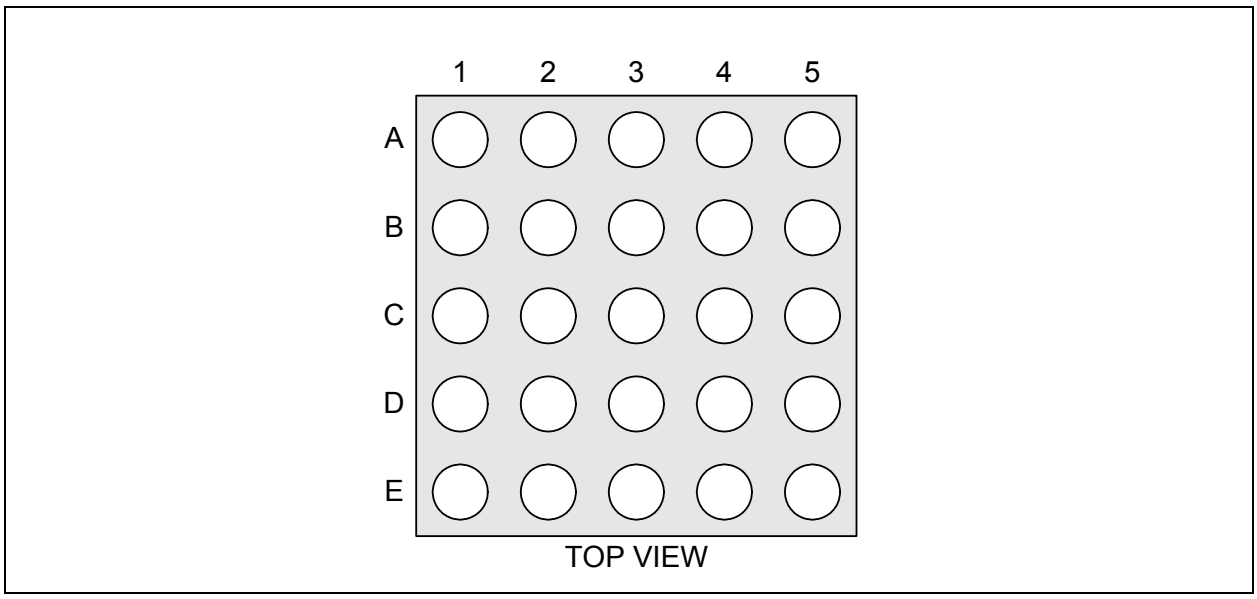

Figure 2 USB3316 VFBGA & UFBGA Pinout - Top View

Pin Definitions

The following table details the pin definitions for the figure above.

Table 1 USB3316 Pin Description

PIN/ BALL	NAME	DIRECTION/ TYPE	ACTIVE LEVEL	DESCRIPTION
1 B1	**ID**	Input, Analog	N/A	**ID** pin of the USB cable. For non-OTG applications this pin can be floated. For an A-Device **ID** is grounded. For a B-Device **ID** is floated.
2 C1	**VBUS**	I/O, Analog	N/A	**VBUS** pin of the USB cable. This pin is used for the Vbus comparator inputs and for Vbus pulsing during session request protocol.
3 C2	**VBAT**	Power	N/A	Regulator input. The regulator supply can be from 5.5V to 3.1V.
4 D2	**VDD3.3**	Power	N/A	3.3V Regulator Output. A 2.2uF (<1 ohm ESR) bypass capacitor to ground is required for regulator stability. The bypass capacitor should be placed as close as possible to the USB3316.
5 D1	**DM**	I/O, Analog	N/A	D- pin of the USB cable.
6 E1	**DP**	I/O, Analog	N/A	D+ pin of the USB cable.
7 E2	**SPKR_R/M**	I/O, Analog	N/A	USB switch in/out for DP signals
8 E3	**SPKR_L**	I/O, Analog	N/A	USB switch in/out for DM signals
9 D3	**DATA[7]**	I/O, CMOS	N/A	ULPI bi-directional data bus. **DATA[7]** is the MSB.
10 E4	**DATA[6]**	I/O, CMOS	N/A	ULPI bi-directional data bus.
11 D4	**DATA[5]**	I/O, CMOS	N/A	ULPI bi-directional data bus.
12 E5	**DATA[4]**	I/O, CMOS	N/A	ULPI bi-directional data bus.
13 D5	**CLKOUT**	Output, CMOS	N/A	60MHz reference clock output. All ULPI signals are driven synchronous to the rising edge of this clock. The system must not drive voltage on the **CLKOUT** pin following POR or hardware reset that exceeds the value of V_{IH_ED}.
14 C4	**DATA[3]**	I/O, CMOS	N/A	ULPI bi-directional data bus.

Table 1 USB3316 Pin Description (continued)

PIN/ BALL	NAME	DIRECTION/ TYPE	ACTIVE LEVEL	DESCRIPTION
15 C5	**DATA[2]**	I/O, CMOS	N/A	ULPI bi-directional data bus.
16 B4	**DATA[1]**	I/O, CMOS	N/A	ULPI bi-directional data bus.
17 B5	**DATA[0]**	I/O, CMOS	N/A	ULPI bi-directional data bus. **DATA[0]** is the LSB.
18 A5	**NXT**	Output, CMOS	High	The PHY asserts **NXT** to throttle the data. When the Link is sending data to the PHY, **NXT** indicates when the current byte has been accepted by the PHY. The Link places the next byte on the data bus in the following clock cycle.
19 A4	**DIR**	Output, CMOS	N/A	Controls the direction of the data bus. When the PHY has data to transfer to the Link, it drives **DIR** high to take ownership of the bus. When the PHY has no data to transfer it drives **DIR** low and monitors the bus for commands from the Link.
20 A3	**STP**	Input, CMOS	High	The Link asserts **STP** for one clock cycle to stop the data stream currently on the bus. If the Link is sending data to the PHY, **STP** indicates the last byte of data was on the bus in the previous cycle.
21 B3	**VDD1.8**	Power	N/A	External 1.8V Supply input pin. This pad needs to be bypassed with a 0.1uF capacitor to ground, placed as close as possible to the USB3316.
22 B2	**RESETB**	Input, CMOS,	Low	When low, the part is suspended with all of the I/O tri-stated. When high the USB3316 will operate as a normal ULPI device.
23 A2	**REFCLK**	Input, CMOS	N/A	19.2MHz Reference Clock input.
24 A1	**RBIAS**	Analog, CMOS	N/A	Bias Resistor pin. This pin requires an 8.06kΩ (±1%) resistor to ground, placed as close as possible to the USB3316.
FLAG C3	**GND**	Ground	N/A	Ground. QFN only: The flag should be connected to the ground plane with a via array under the exposed flag. This is the main ground for the IC.

Application Diagrams

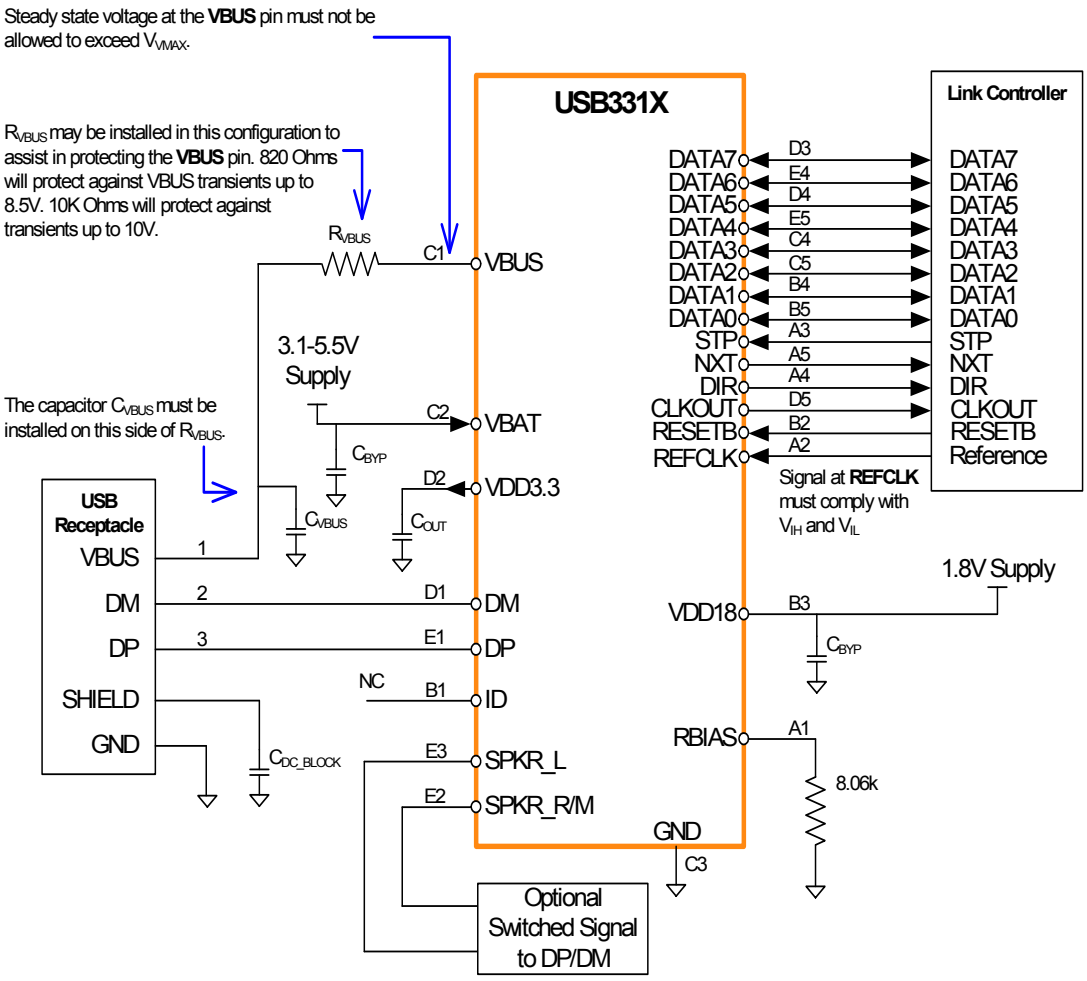

Figure 3 USB3316 BGA Application Diagram (Device)

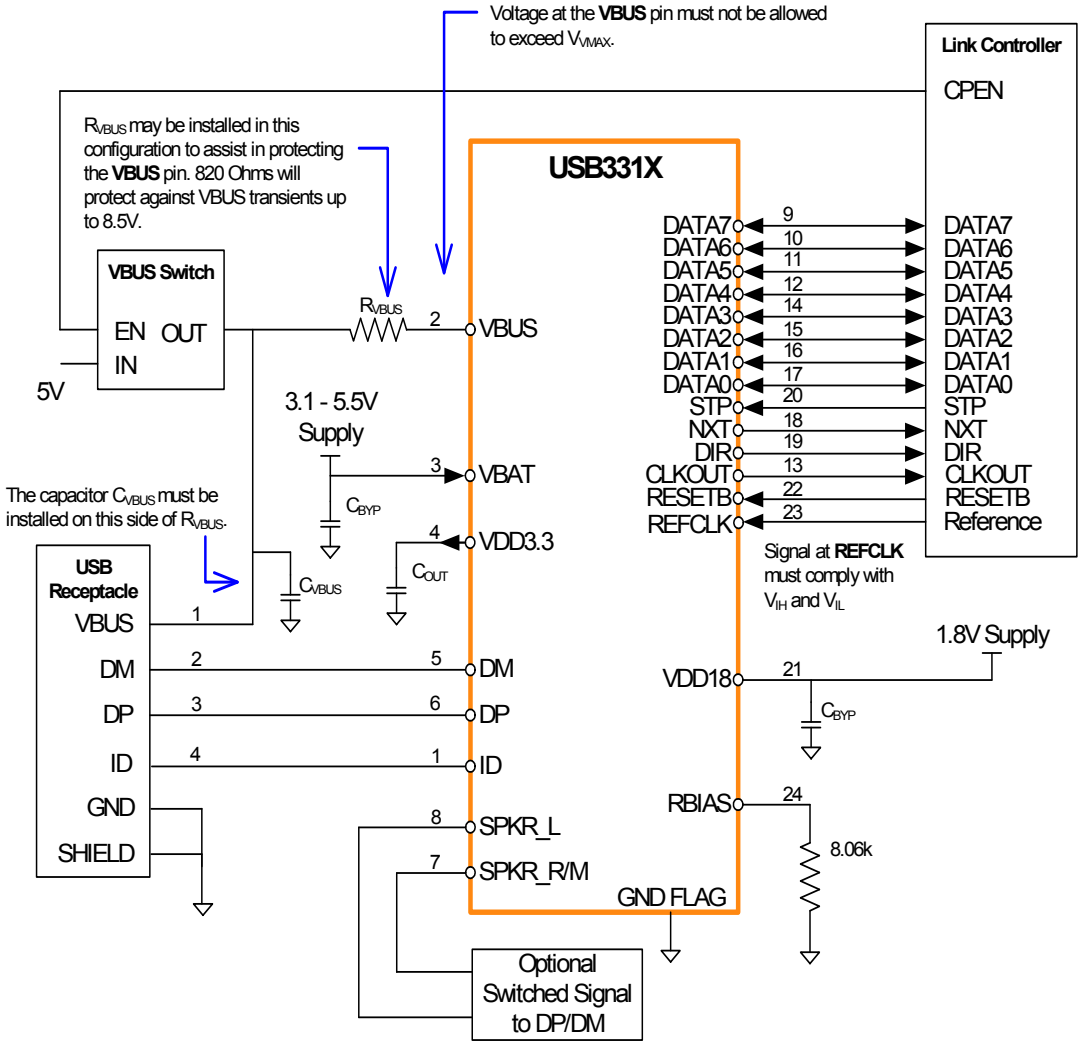

Figure 3.1 USB3316 QFN Application Diagram (Host or OTG)

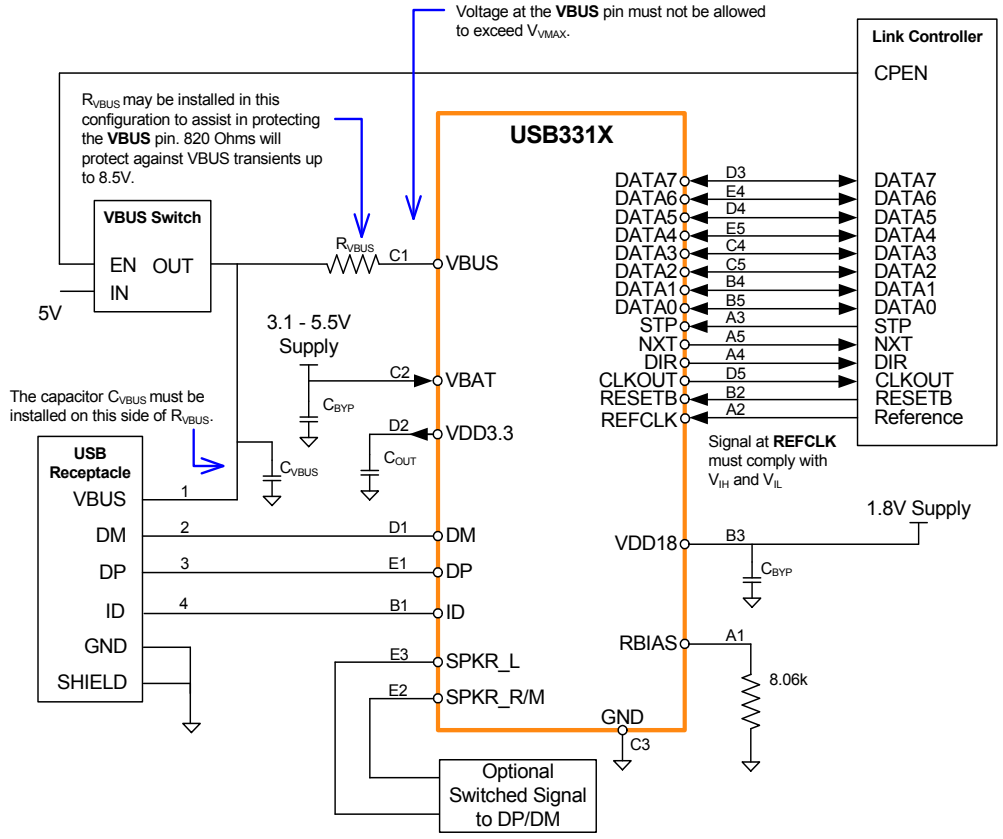

Figure 4 USB3316 BGA Application Diagram (Host or OTG)

Package Outline

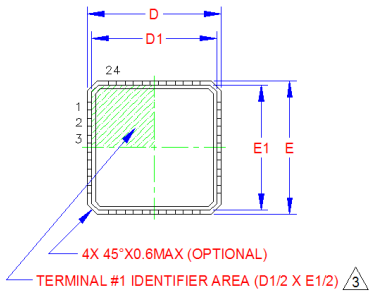

TOP VIEW

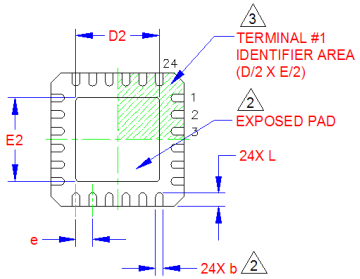

BOTTOM VIEW

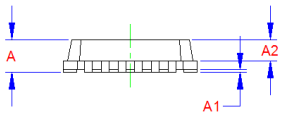

SIDE VIEW

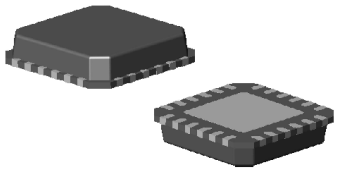

3-D VIEWS

COMMON DIMENSIONS					
SYMBOL	MIN	NOM	MAX	NOTE	REMARK
A	0.70	-	1.00	-	OVERALL PACKAGE HEIGHT
A1	0	0.02	0.05	-	STANDOFF
A2	-	-	0.90	-	MOLD CAP THICKNESS
D/E	3.85	4.00	4.15	-	X/Y BODY SIZE
D1/E1	3.55	-	3.95	-	X/Y MOLD CAP SIZE
D2/E2	2.40	2.50	2.60	2	X/Y EXPOSED PAD SIZE
L	0.30	-	0.50	-	TERMINAL LENGTH
b	0.18	0.25	0.30	2	TERMINAL WIDTH
e	0.50 BSC			-	TERMINAL PITCH

NOTES:
1. ALL DIMENSIONS ARE IN MILLIMETERS.
2. POSITION TOLERANCE OF EACH TERMINAL AND EXPOSED PAD IS ± 0.05mm AT MAXIMUM MATERIAL CONDITION. DIMENSIONS "b" APPLIES TO PLATED TERMINALS AND IT IS MEASURED BETWEEN 0.15 AND 0.30 mm FROM THE TERMINAL TIP.
3. DETAILS OF TERMINAL #1 IDENTIFIER ARE OPTIONAL BUT MUST BE LOCATED WITHIN THE AREA INDICATED.

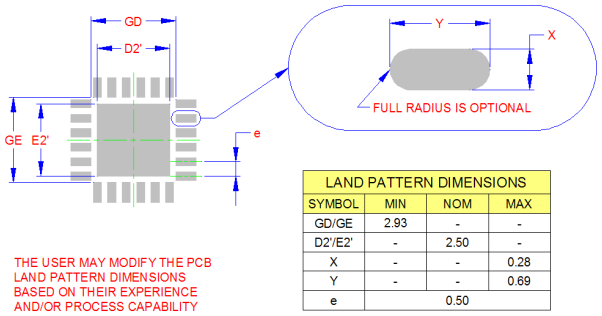

LAND PATTERN DIMENSIONS			
SYMBOL	MIN	NOM	MAX
GD/GE	2.93	-	-
D2'/E2'	-	2.50	-
X	-	-	0.28
Y	-	-	0.69
e		0.50	

RECOMMENDED PCB LAND PATTERN

Figure 4.1 24-pin QFN, 4x4mm Body, 0.5mm Pitch

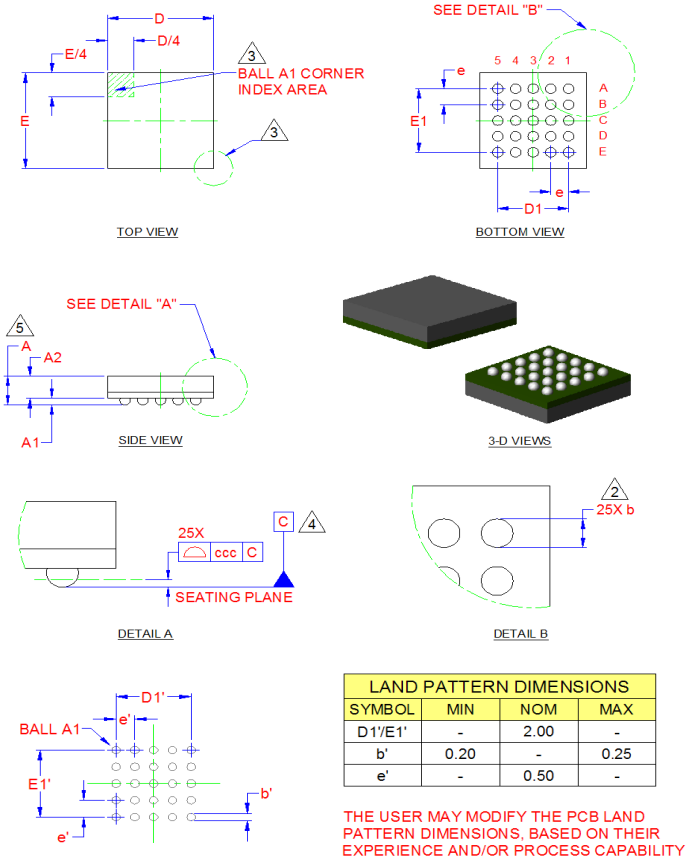

COMMON DIMENSIONS					
SYMBOL	MIN	NOM	MAX	NOTE	REMARK
A	-	-	1.00	5	OVERALL PACKAGE HEIGHT
A1	0.15	-	-	-	STANDOFF
A2	0.65	-	-	-	PKG BODY THICKNESS
D/E	2.90	3.00	3.10	-	X/Y BODY SIZE
D1/E1		2.00 BSC		-	X/Y END BALLS DISTANCE
b	0.25	0.30	0.35	2	BALL DIAMETER
e		0.50 BSC		-	BALL PITCH
ccc	0	-	0.08	4	COPLANARITY

NOTES:
1. ALL DIMENSIONS ARE IN MILLIMETERS.
2. MAXIMUM RADIAL TRUE POSITION TOLERANCE OF EACH BALL IS ± 0.075mm AT MAXIMUM MATERIAL CONDITION. DIMENSION "b" IS MEASURED AT THE MAXIMUM BALL DIAMETER, PARALLEL TO PRIMARY DATUM "C".
3. THE BALL "A1" CORNER MUST BE IDENTIFIED IN THE INDICATED AREA OF THE TOP PACKAGE SURFACE BY USING A CORNER CHAMFER, INK/LASER/METALIZED MARKING, INDENTATION, OR OTHER FEATURE OF PACKAGE BODY. EXACT SHAPE OF EACH CORNER IS OPTIONAL, BUT TERMINAL "A1" CORNER MUST BE UNIQUE.
4. PRIMARY DATUM "C" AND SEATING PLANE ARE DEFINED BY THE SPHERICAL CROWNS OF THE CONTACT SOLDER BALLS.
5. DIMENSION "A" DOES NOT INCLUDE ATTACHED EXTERNAL FEATURES, SUCH AS HEAT SINK OR CHIP CAPACITORS.

LAND PATTERN DIMENSIONS			
SYMBOL	MIN	NOM	MAX
D1'/E1'	-	2.00	-
b'	0.20	-	0.25
e'	-	0.50	-

THE USER MAY MODIFY THE PCB LAND PATTERN DIMENSIONS, BASED ON THEIR EXPERIENCE AND/OR PROCESS CAPABILITY

Figure 5 25-Pin VFBGA, 3x3mm Body, 0.5mm Pitch

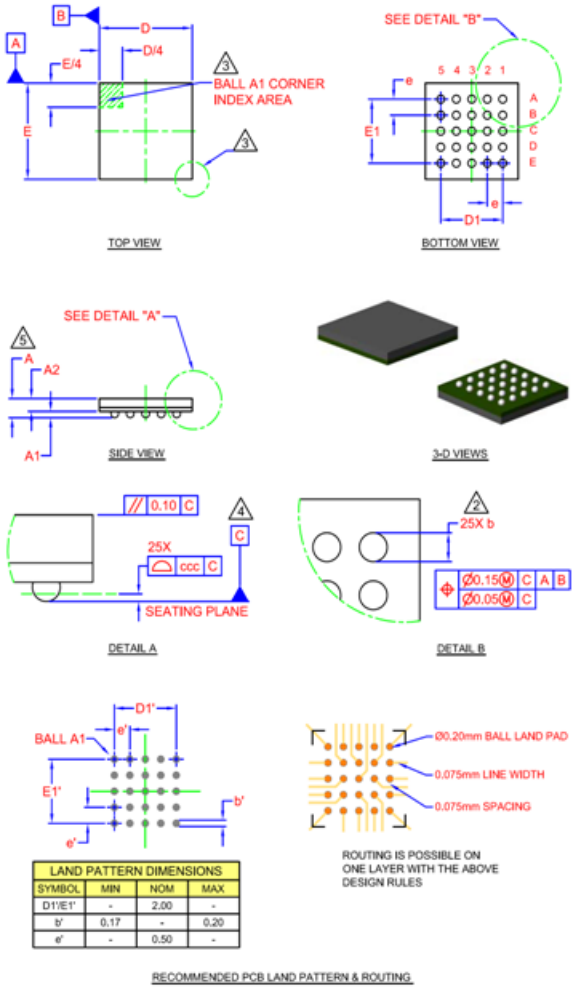

LAND PATTERN DIMENSIONS			
SYMBOL	MIN	NOM	MAX
D1'/E1'	-	2.00	-
b'	0.17	-	0.20
e'	-	0.50	-

COMMON DIMENSIONS					
SYMBOL	MIN	NOM	MAX	NOTE	REMARK
A	-	0.56	0.61	5	OVERALL PACKAGE HEIGHT
A1	0.13	-	0.23	-	STANDOFF
A2		0.38 REF		-	PKG BODY THICKNESS
D/E	2.90	3.00	3.10	-	X/Y BODY SIZE
D1/E1		2.00 BSC		-	X/Y END BALLS DISTANCE
b	0.20	0.25	0.30	2	BALL DIAMETER
e		0.50 BSC		-	BALL PITCH
ccc	0	-	0.08	4	COPLANARITY

NOTES:

1. ALL DIMENSIONS ARE IN MILLIMETERS.
2. DIMENSION "b" IS MEASURED AT THE MAXIMUM BALL DIAMETER, PARALLEL TO PRIMARY DATUM "C".
3. THE BALL "A1" CORNER MUST BE IDENTIFIED IN THE INDICATED AREA OF THE TOP PACKAGE SURFACE BY USING A CORNER CHAMFER, INK/LASER/METALIZED MARKING, INDENTATION, OR OTHER FEATURE OF PACKAGE BODY. EXACT SHAPE OF EACH CORNER IS OPTIONAL, BUT TERMINAL "A1" CORNER MUST BE UNIQUE.
4. PRIMARY DATUM "C" AND SEATING PLANE ARE DEFINED BY THE SPHERICAL CROWNS OF THE CONTACT SOLDER BALLS.
5. DIMENSION "A" DOES NOT INCLUDE ATTACHED EXTERNAL FEATURES, SUCH AS HEAT SINK OR CHIP CAPACITORS.

Figure 6 25-Pin UFBGA, 3x3mm Body, 0.5mm Pitch